American Standard

Style That Works Better

BARRIER FREE

ROYTON™ COUNTERTOP SINK

VITREOUS CHINA

ROYTON™ COUNTERTOP SINK

- Made from vitreous china
- Self-rimming with cutout template supplied
- Center drain outlet
- Front overflow

❏ **0571.000** Round sink without faucet deck

Nominal Dimensions:
349mm (13-3/4") Round

Bowl size:
273mm (10-3/4") round
140mm (5-1/2") deep

Compliance Certifications - Meets or Exceeds the Following Specifications:
- ASME A112.19.2M for Vitreous China Fixtures

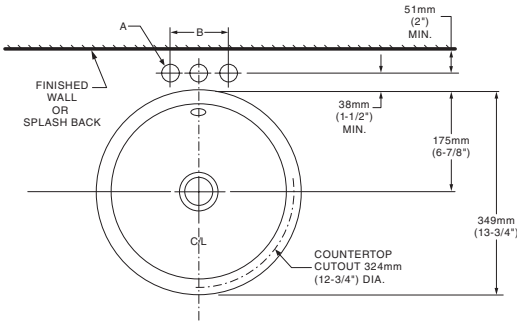

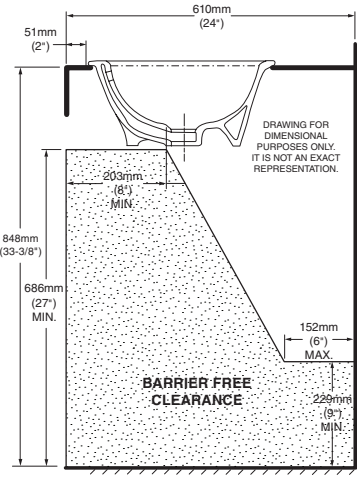

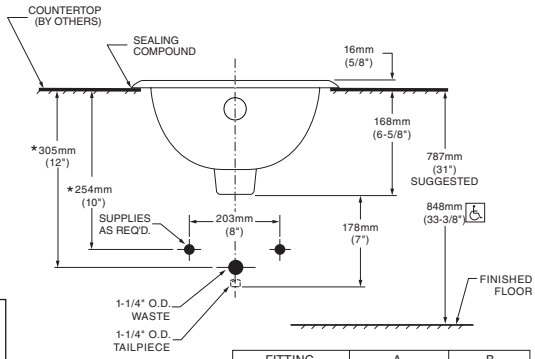

FITTING	A	B
CENTER-SET	27mm(1-1/16")	102mm(4")
SPREAD	32mm(1-1/4")	203mm(8")

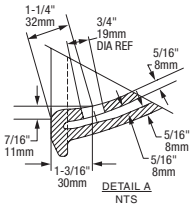

To Be Specified:
- ❏ Color: ❏ White ❏ Bone ❏ Linen ❏ Silver ❏ Fawn Beige ❏ Black
- ❏ Faucet*:
- ❏ Faucet Finish:
- ❏ Supplies:
- ❏ 1-1/4" Trap:

* See faucet section for additional models available

MEETS THE AMERICANS WITH DISABILITIES ACT GUIDELINES AND ANSI A117.1 ACCESSIBLE AND USABLE BUILDINGS AND FACILITIES - CHECK LOCAL CODES.
Install lavatory 864mm (34") from finished floor.
Lavatory installed 51mm (2") minimum from front edge of countertop provides 686mm (27") knee clearance area.

NOTES:
* DIMENSIONS SHOWN FOR LOCATION OF SUPPLIES AND "P" TRAP ARE SUGGESTED.
FOR COUNTERTOP CUTOUT AND INSTALLATION INSTRUCTIONS USE TEMPLATE SUPPLIED WITH SINK.
FITTINGS NOT INCLUDED WITH FIXTURE AND MUST BE ORDERED SEPARATELY.
SEALING COMPOUND SUPPLIED BY OTHERS.

IMPORTANT: Dimensions of fixtures are nominal and may vary within the range of tolerances established by ANSI Standard A112.19.2. These measurements are subject to change or cancellation. No responsibility is assumed for use of superseded or voided pages.

© 2012 AS America Inc.