WINDSOR -V48-WT

Features

- Solid poplar frame and MDF
- 2 soft-close doors
- 5 soft-close drawers
- Adjustable height levelers
- Under counter application

Colors / Finishes

- White

Nominal Dimension

- 48W x 21.5D x 34H (inches)

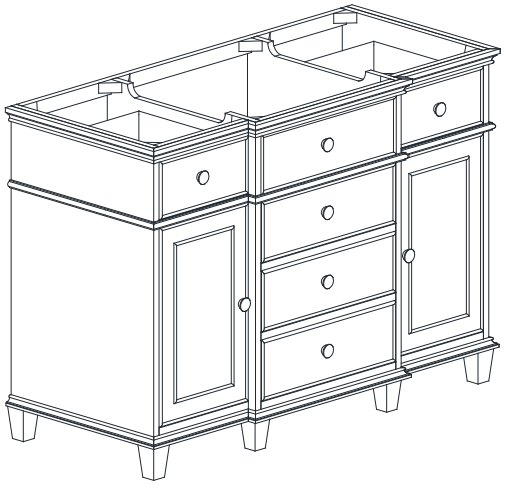

Components

Mirror	WINDSOR -M30-WT	WINDSOR -M34-WT
Vanity Top	WINDSOR-SUT49GB	
Sink	CUM18WT	CUM18LN

Product Diagrams

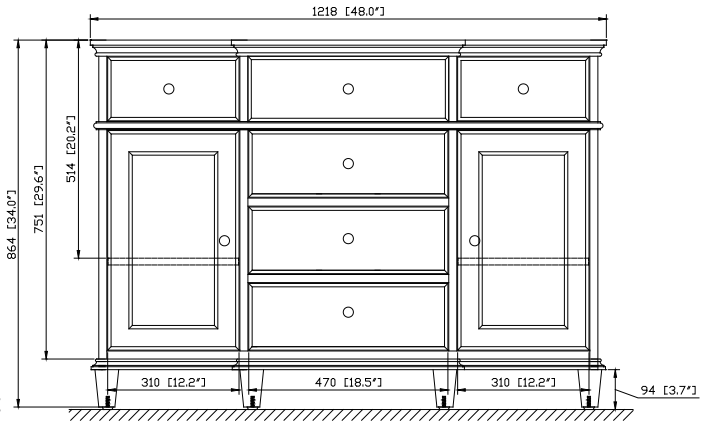

Front

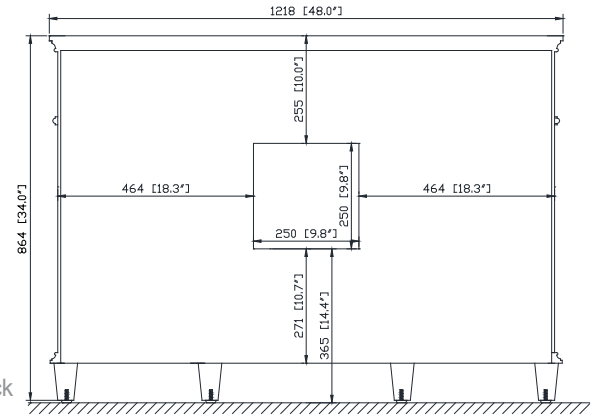

Back

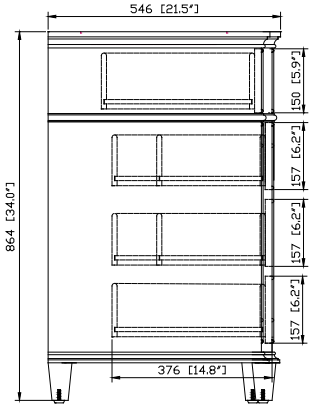

Side

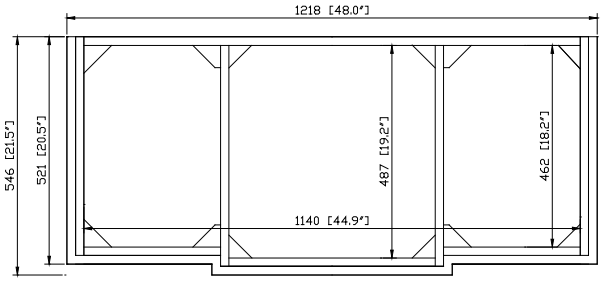

Top

For customer support please call 626 404 7678 weekdays 9:00 to 6:00 PST