TECHNICAL SPECIFICATIONS

Techno

Single handle control low profile lavatory

code | 221 100 xxx

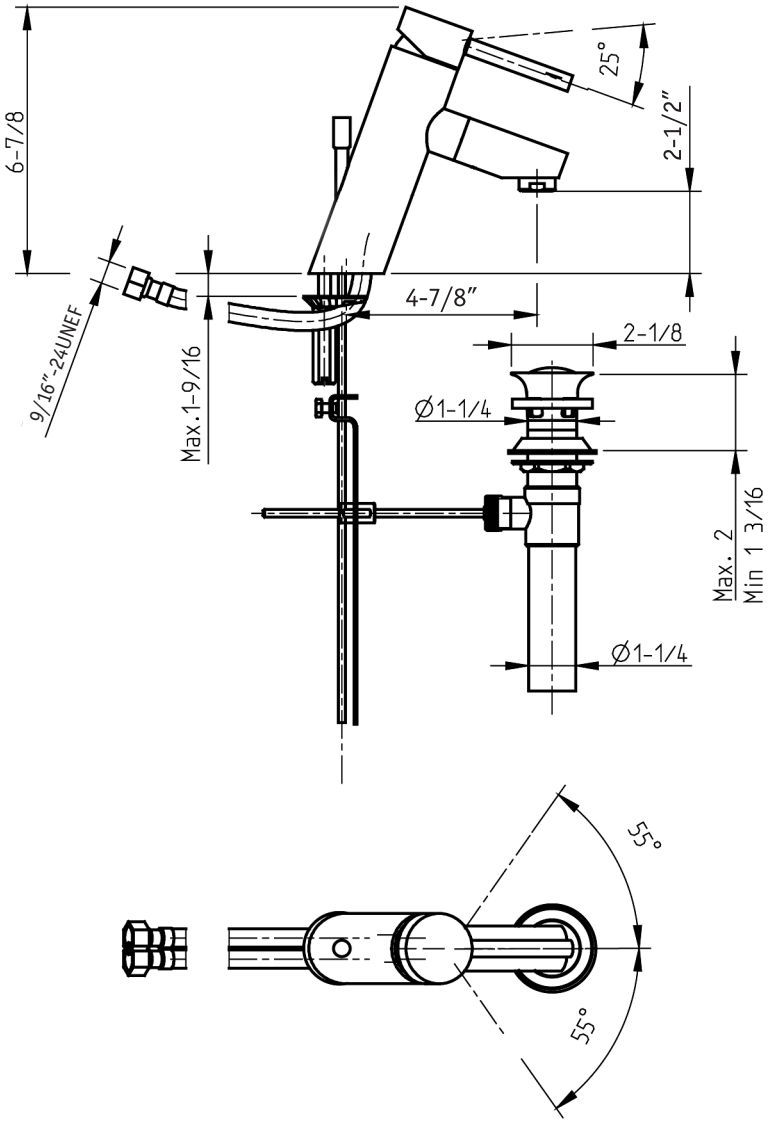

Installations notes:

- Minimum hole diameter is 1 3/8"

5663171
983TH000W05

dimensions inches

PLUMBING

CIFIAL

CIFIAL USA
USA P +1800 5284904 F +1800 5281969 info@cifialusa.com www.cifialusa.com
CIFIAL Torneiras, S.A.
Portugal T +351 256 780 700 F +351 256 780 710 cifial@cifial.pt www.cifial.pt
CIFIALDECOR, S.A.
Espanha T +34 916 110 261 F +34 916 103 694 cifialdecor@infonegocio.com
CIFIAL UK, Ltd.
UK P +44 1933 402 008 F +44 1933 402 063 sales@cifial.co.uk www.cifial.co.uk

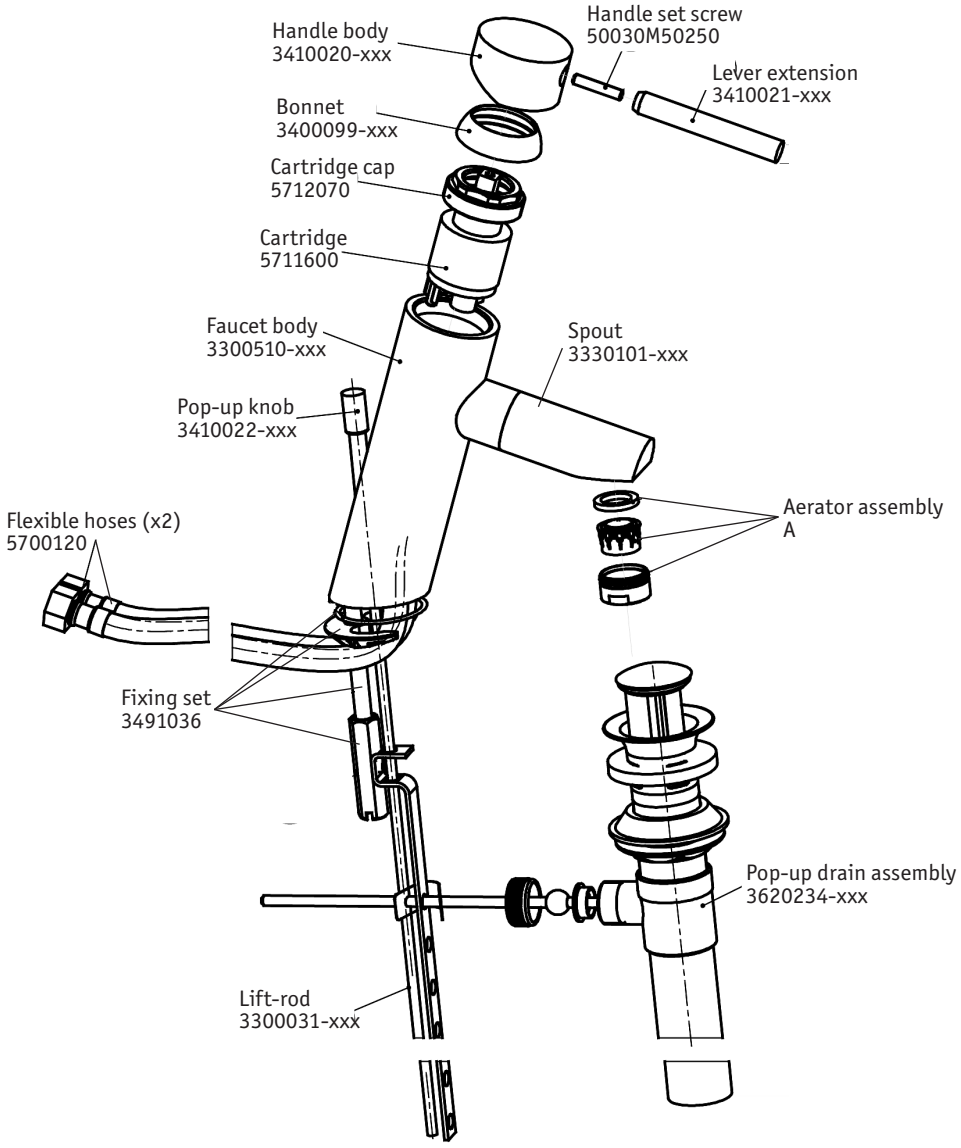

5663171
983TH000W05

	625	620
A	5713111	3460008-620 5C02043 5C03040

Note: xxx represent different finishes.