SPECIFICATIONS

OPULENCE™ SINGLE HANDLE PRESSURE BALANCE TUB & SHOWER TRIM KIT

Model
D502157

Description
- Single handle w/4" bell showerhead
- Cast slip-fit spout
- Diverter on valve (Tub & Shower only)
- Back to back installation capabilities

Standards
- UPC/cUPC
- Energy policy act of 1992

MEETS ASME A112.18.1
- ASME A112.18.1

MEETS ASSE A112.18.1
- ASSE 1016

- ADA Accessibility Guidelines for Buildings and Facilities - 4.27.4 Controls and Mechanisms

Warranty
Danze products are covered by a manufacturer's limited "lifetime" warranty for manufacturing defects.

Flow Rate

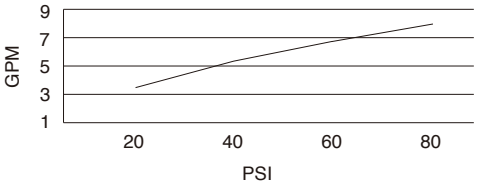

Trim Kits :
(for use w/pressure balance valves)
D502157T (Tub/Shower trim)
D502757T (Shower only trim)
D500657T (Tub trim w/valve escutcheon)
D500457T (Valve only escutcheon trim w/diverter)
D510457T (Valve only escutcheon trim w/o diverter)

Special Packaging
- This product also available with valve packaged separate from trim.
- Tub & Shower and Valve Only Escutcheon w/Diverter Trim Kit - use w/valve: D113000BT (w/diverter & stops)
- Shower Only & Tub & Valve Only Escutcheon w/o Diverter Trim Kit - use w/valve: D112000BT (w/stops) or D115000BT (w/o stops)
- Pressure Balance Valves are combination 1/2" copper sweat, 1/2" NPT threaded connectors for all ports.

Finishes Available
- Chrome
- Other:Refer to Price List for additional finish

With Diverter & Stops:
D502157 (Tub/Shower)

With Stops:
D502757 (Shower only)

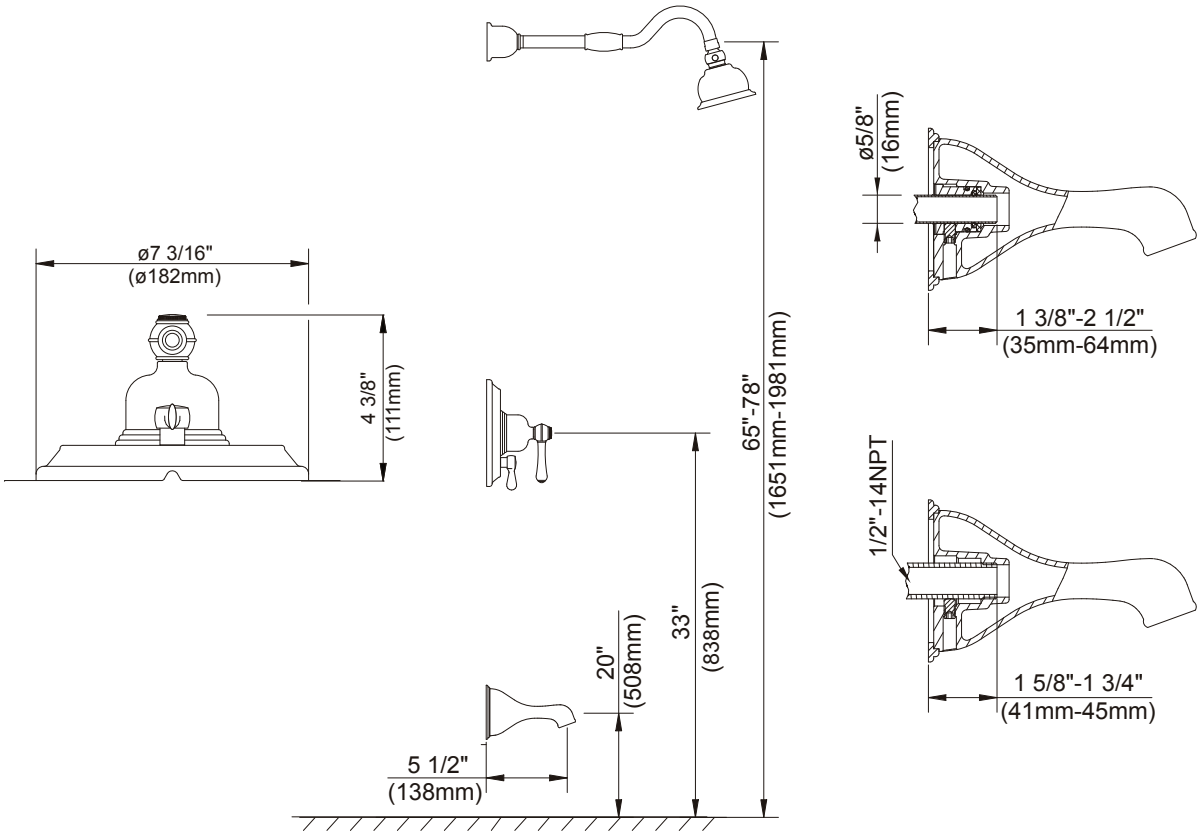

Submittal Information:

Job Name: _____ *Location:* _____

Contractor: _____ *Contact #:* _____