2540-LHP

LAVATORY FAUCETS

- Lockwood™ Bath Collection
- Two Handle Deck Mount
- 3 Hole Sink Applications
- 4" Centerset

Submitted Model No.:_____

Specific Features:_____

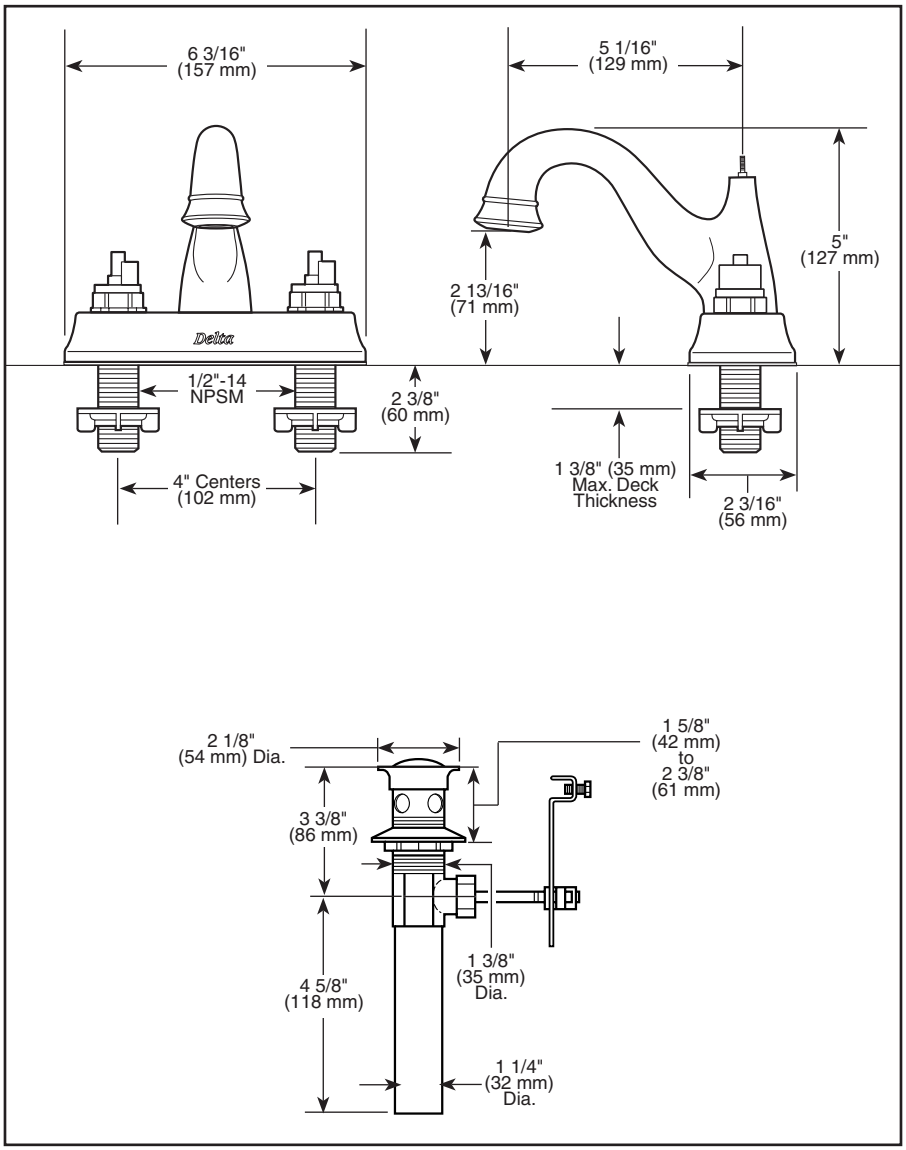

STANDARD SPECIFICATIONS:

- Solid brass fabricated body.
- 4" (102 mm) centerset.
- 5 1/16" (129 mm) long, 5" (127 mm) high rigid spout.
- LHP-Less Handle Program. See handle options below.
- Hot and cold stems are interchangeable.
- 1/4 turn handle stops.
- Control mechanism is a rotating cylinder with stainless steel plate and 90° rotation, with replaceable non-metallic seats operating in stainless steel lined sockets.
- 1/2"-14 NPSM threaded male inlet shanks.
- LHP models have metal drain with pop-up type fitting with plated flange and stopper.
- Maximum flow rate 1.5 gpm @ 60 PSI.

WARRANTY

- Lifetime Faucet and Finish Limited Warranty to the original consumer purchaser to be free from defects in material and workmanship.
- 5 Year Limited Warranty for usage in all industrial, commercial and business applications.

COMPLIES WITH:

- ASME A112.18.1 / CSA B125.1
- ASME A112.18.2 / CSA B125.2
- Indicates compliance to ICC/ANSI A117.1
- EPA Water Sense

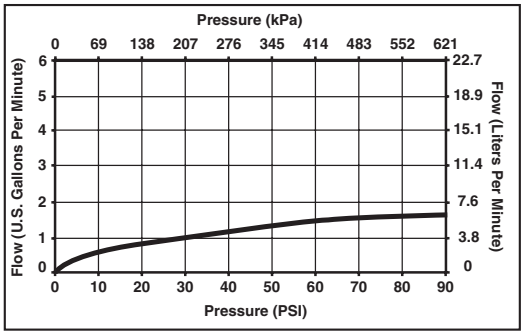

Available LHP Handle Option
▲Designate proper finish suffix

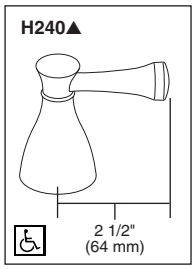

Delta reserves the right (1) to make changes in specifications and materials, and (2) to change or discontinue models, both without notice or obligation. Dimensions are for reference only. See current full-line price book or www.specselect.com for finish options and product availability.

DELTA FAUCET COMPANY
55 E. 111th Street, Indianapolis, Indiana 46280
395 Matheson Blvd. E., Mississauga, ON L4Z 2H2

© 2008 Masco Corporation of Indiana