Product data sheet (PDF)

Axor Starck Organic
4-Hole Roman Tub Set

Description

- Anti-scald 100°F safety stop
- Ceramic on/off control for handshower outlet
- Diverter integrated into tub spout
- Pull-out Raindance S 100 1-Jet handshower with AIR-injection Rain AIR spray mode
- Available Summer 2013

Finishes	Part no.	List Price
chrome	12425001	$ 1,150.00

Product image
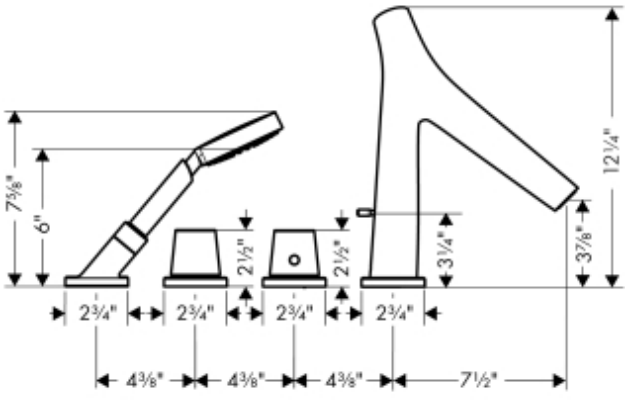
Scale drawing