**Focus**
**Focus Bar Faucet**
Finishes : **Steel Optik** Part no. : **04507801**

## Description

**Features**

- Swivel range 150°
- Aerated spray
- Flow: 1.5 GPM
- Ceramic Cartridge

## Item details

| | |
|---|---|
| List Price | $ 378.00 |

## Technology

Eco Smart

Quick Clean

## Compliance

ADA

## Product image
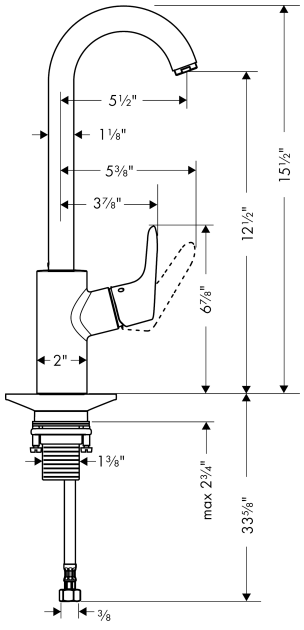
## Scale drawing