MODEL: 32008VC

PACKING DIAGRAM

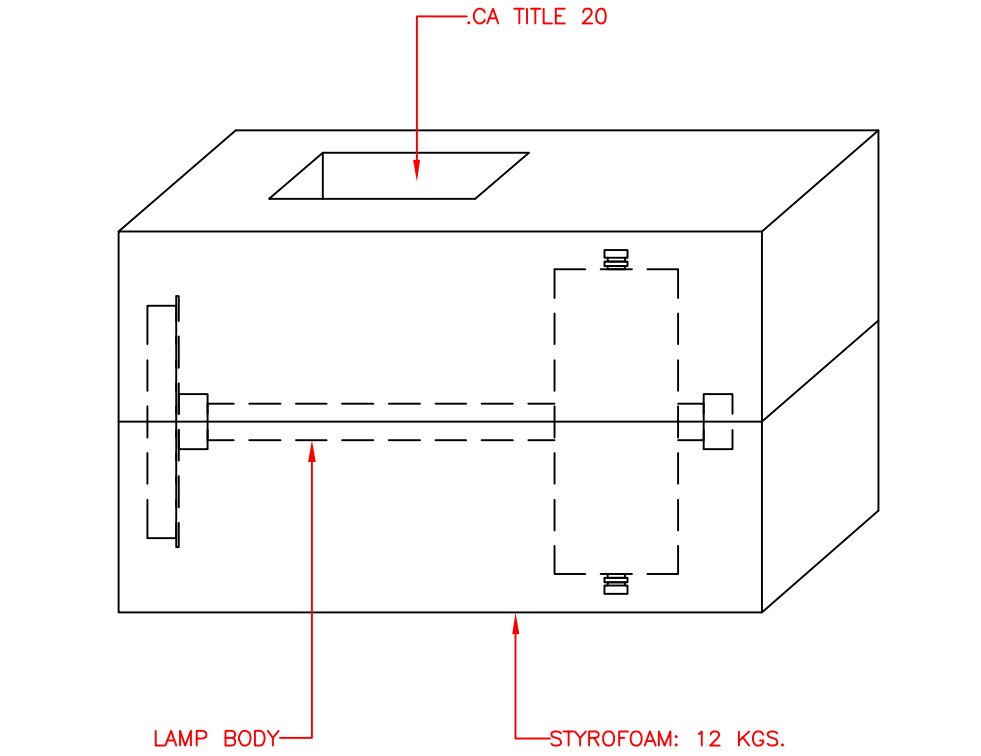

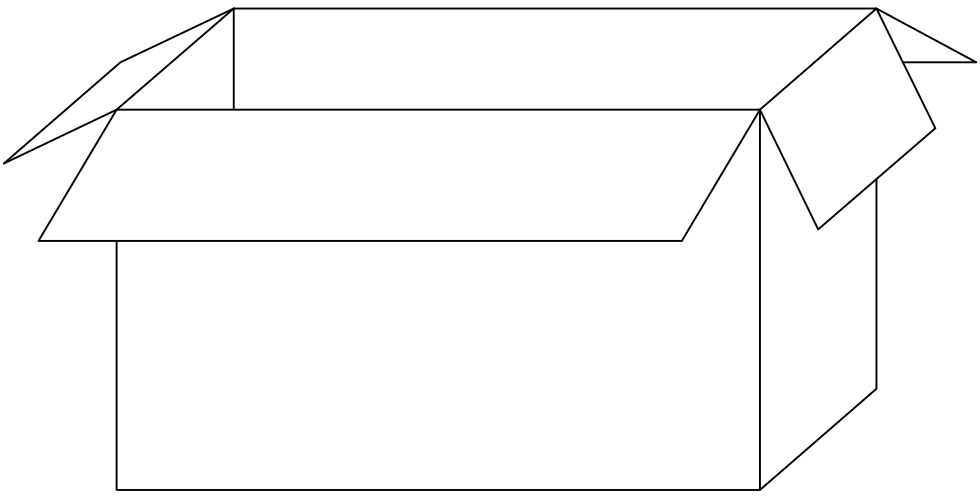

ASSEMBLY INSTRUCTIONS

READ AND SAVE THESE INSTRUCTIONS

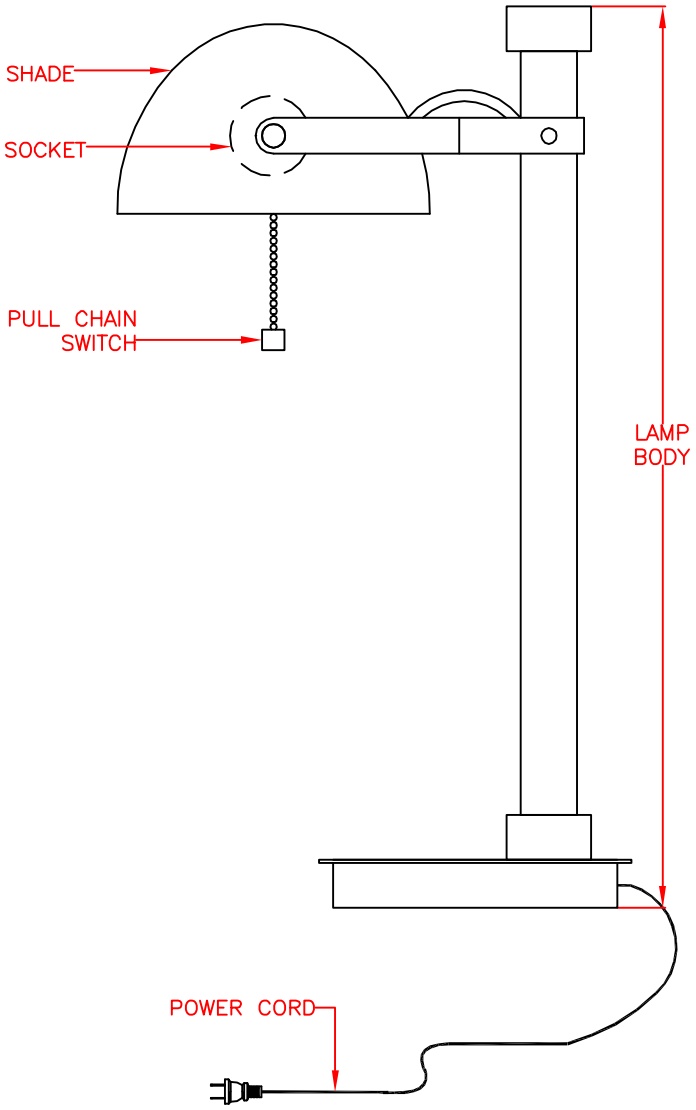

UNPACK THE LAMP

YOU SHOULD HAVE RECEIVED THE FOLLOWING PARTS IN THE PACKAGE: LAMP BODY. TO PROTECT THE FINISH, PLACE THE LAMP ON A SOFT SURFACE.

ASSEMBLE THE LAMP

1. INSTALL A 60 WATT MAXIMUM MEDIUM BASE TYPE "A" BULB (NOT INCLUDED) INTO SOCKET.

2. PLUG THE POWER CORD INTO AN OUTLET AND TURN ON AT SWITCH.

BULB REPLACEMENT

1. BEFORE REPLACING THE BULB, BE SURE THAT THE SHADE AND BULB ARE COOL AND LAMP IS UNPLUGGED.

2. UNSCREW EXISTING BULB FROM SOCKET AND REPLACE WITH A NEW BULB. PLUG POWER SUPPLY CORD BACK INTO OUTLET.

TROUBLE SHOOTING

1. IF YOUR LAMP DOES NOT LIGHT, CHECK PLUG AT THE OUTLET. MAKE SURE THE PLUG IS FULLY AND PROPERLY INSERTED INTO THE POWER OUTLET.

2. IF LAMP STILL DOES NOT LIGHT, UNPLUG FROM OUTLET. CHECK THE BULB FOR A BROKEN FILAMENT. REPLACE BULB IF NECESSARY, PLUG IN LAMP AND TURN IT ON.

3. IF THE LAMP STILL DOES NOT LIGHT, PLEASE CONTACT YOUR DISTRIBUTOR OR PLACE OF PURCHASE.

IMPORTANT SAFETY INSTRUCTIONS

THIS PORTABLE LAMP HAS A POLARIZED PLUG (ONE BLADE IS WIDER THAN THE OTHER) AS A FEATURE TO REDUCE THE RISK OF ELECTRIC SHOCK. THIS PLUG WILL FIT IN A POLARIZED OUTLET ONLY ONE WAY. IF THE PLUG DOES NOT FIT FULLY IN THE OUTLET, REVERSE THE PLUG. IF IT STILL DOES NOT FIT, CONTACT A QUALIFIED ELECTRICIAN. NEVER USE WITH AN EXTENSION CORD UNLESS PLUG CAN BE FULLY INSERTED. DO NOT ALTER THE PLUG.