KOHLER®

Roughing-In

K-10272, K-10273
FORTÉ®
WIDESPREAD LAVATORY FAUCET

Product Information

Applicable faucet:	
Widespread lavatory faucet with sculpted lever handle and metal drain (shown)	K-10272-4
Widespread lavatory faucet with traditional lever handle and metal drain	K-10272-4A
Widespread lavatory faucet with script lever handle and metal drain	K-10272-4G
Widespread lavatory faucet with sculpted lever handle and plastic drain (shown)	K-10273-4
Widespread lavatory faucet with traditional lever handle and plastic drain	K-10273-4A
Lever handles are ADA compliant.	ADA

Optional accessories:	
Wrench for long-stemmed ceramic valve bodies	40003

Installation Notes

Install this product according to the installation guide.
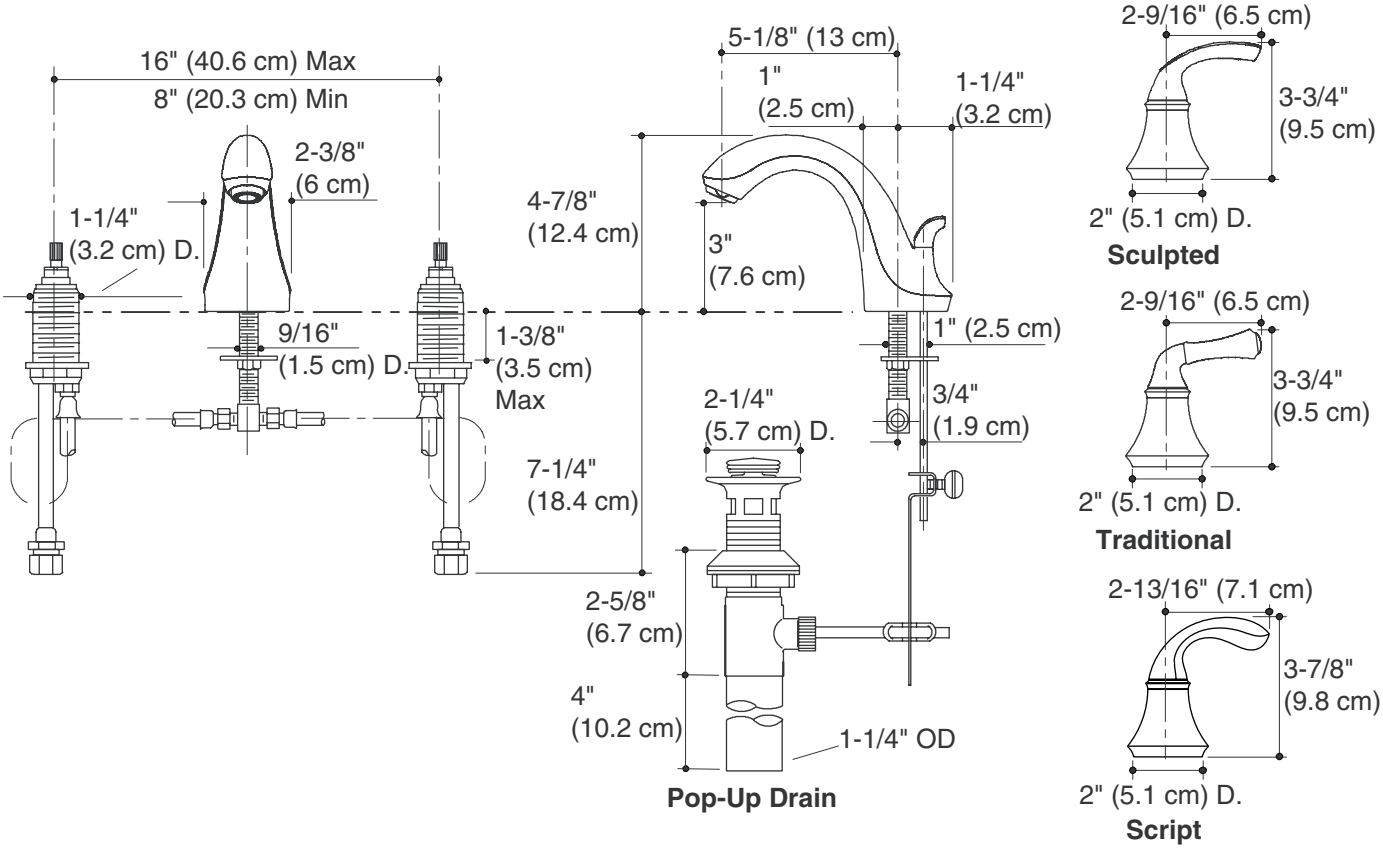
Lower flow aerator options are available - please refer to the Kohler price book.