KOHLER®

Roughing-In

K-2035
PINOIR®
WALL-MOUNT LAVATORY

Product Information

Applicable product:	
Lavatory with 8″ (20.3 cm) centers	K-2035-8
Lavatory with 4″ (10.2 cm) centers	K-2035-4
Lavatory with single hole	K-2035-1

Fixture*:	
Basin area	18″ (45.7 cm) x 12″ (30.5 cm)
Water depth	4″ (10.2 cm)
Drain hole	1-3/4″ (4.4 cm) D.
* Approximate measurements for comparison only.	

Recommended accessories:	
Lavatory supplies, 3/8″ (pair)	K-7605-P
P-Trap	K-8998

Holes	**K-2035-8**	**K-2035-4**	**K-2035-1**
Spout	1-3/8″ (3.5 cm) D.	1-1/4″ (3.2 cm) D.	1-3/8″ (3.5 cm) D.
Faucet	1-3/8″ (3.5 cm) D.	1-1/4″ (3.2 cm) D.	

Included components:	
Lavatory basin, 8″ (20.3 cm) centers	K-2028-8
Lavatory basin, 4″ (10.2 cm) centers	K-2028-4
Lavatory basin, single-hole	K-2028-1
Shroud	K-2057
Rubber pads	63069
Hanger	64839
Shroud accessory pack	80265

Installation Notes

Install this product according to the installation guide.

Will comply with **ADA** when installed per section 606 Lavatories of the Act.

Will comply with **CSA B651** when installed per Clause 4.3.3 of the standard.

Will comply with **OBC** when installed per Clause 3.8.3.11.

Fixture conforms to ASME Standard A112.19.2/CSA B45.1. All dimensions are nominal.

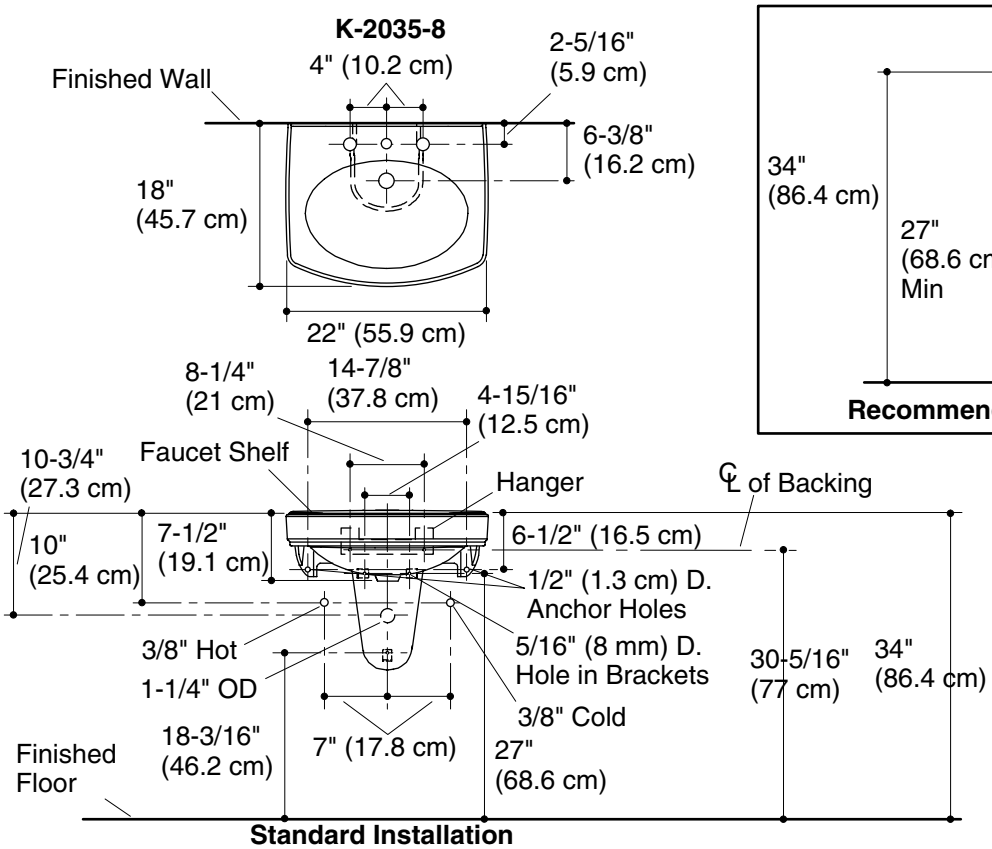

Standard Installation

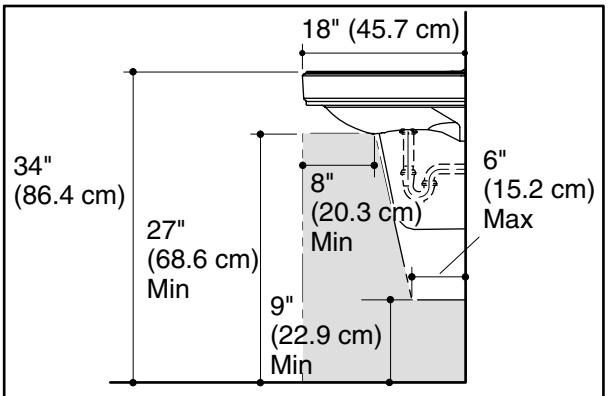
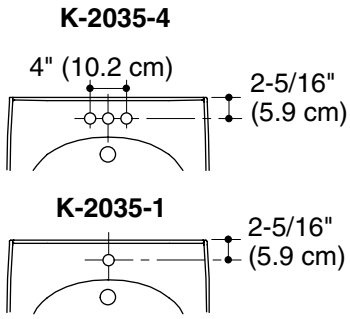
Recommended ADA Installation