Danze®

SPECIFICATIONS

ROMAN TUB FAUCET WITH SOFT TOUCH PERSONAL SHOWER™

Description

- 2 handle with solid brass spout
- Soft Touch Personal Shower ™ with integral diverter system
- Spout plug for pressure testing and plaster guard
- Fits 1 3/8" to 1 1/2" diameter mounting hole

Standards

- ASME A112.18.1
- CSA B125
- Listed IAPMO/UPC
- Energy policy act of 1992
- ADA Accessibility Guidelines for Buildings and Facilities - 4.27.4 Controls and Mechanisms

Warranty

Danze faucets are covered by a manufacturer's limited "lifetime" warranty for manufacturing defects.

D301725 (Shown)
AERIAL™

Available Colors & Finish
- Chrome
- Brushed Nickel (BN)
- Oil Rub Bronze (RB)

Trim Kits:(for use w/rough-in valves)
D301525T (w/o Personal Shower)

Special Packaging
- This product also available with valve packaged separate from trim.
- Use with rough-in valve: D210000BT (10" CC fixed) OR D215000BT (widespread)
- Valves are combination 1/2" copper sweat, 1/2" NPT threaded connectors for all ports

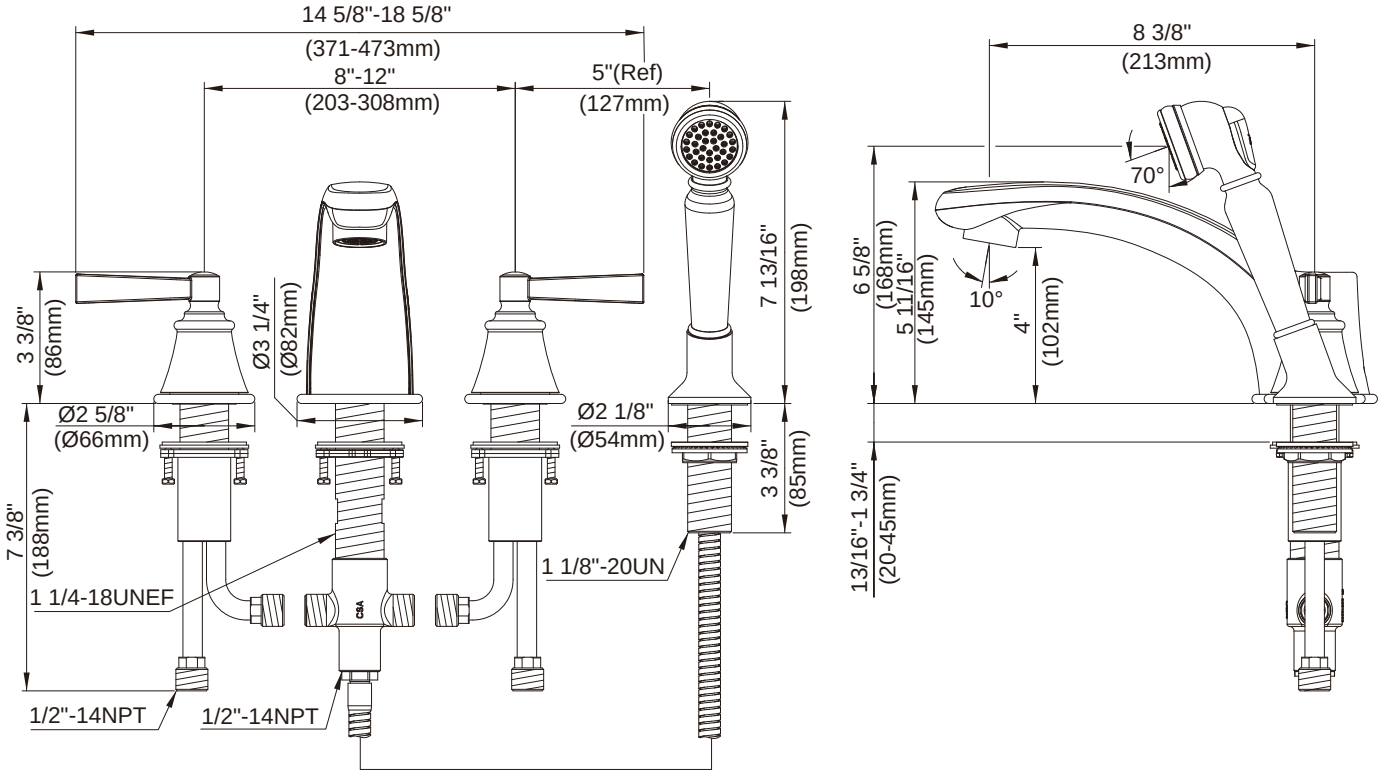

Specific Features: _____ *Submitted Model No.:* _____

SD301725/08-08.01

Danze, Inc., 2500 Internationale Parkway, Woodridge, IL 60517, USA

Danze®

SPECIFICATIONS

ROMAN TUB FAUCET ROUGH-IN VALVES-CRITICAL DIMENSIONS

Rough-in valve D215000BT (widespread)

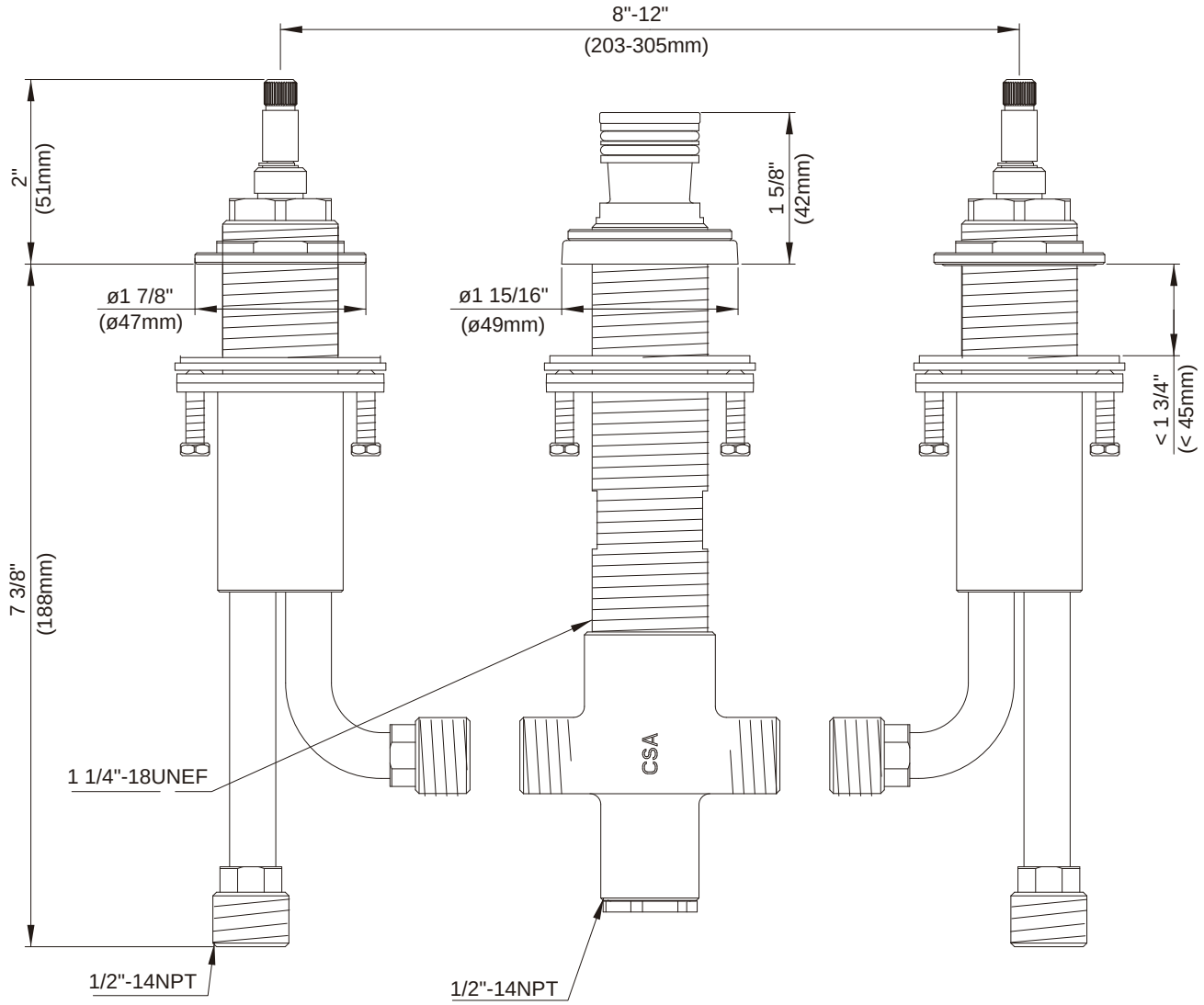

*** Installation method shown is for deck thickness of less than 1-3/4". If the installation is for deck thickness between 1-3/4" and 3-1/2", the sleeve nut needs to be reversed.**

Specific Features: _____ *Submitted Model No.:* _____

Danze, Inc., 2500 Internationale Parkway, Woodridge, IL 60517, USA WWW.DANZE.COM