Axor Montreux
Axor Montreux Widespread Faucet with Lever Handles
Finishes : **Chrome** Part no. : **16514001**

Description

Features

- Laminar spray
- Flow: 1.5 GPM
- 90° ceramic valves
- Includes pop-up assembly
- Swivel range 150°

Item details

List Price	$ 904.00

Technology

Eco Smart

Comfort Zone

Compliance

ADA

UPC

WaterSense Meets EPA Criteria

Product image
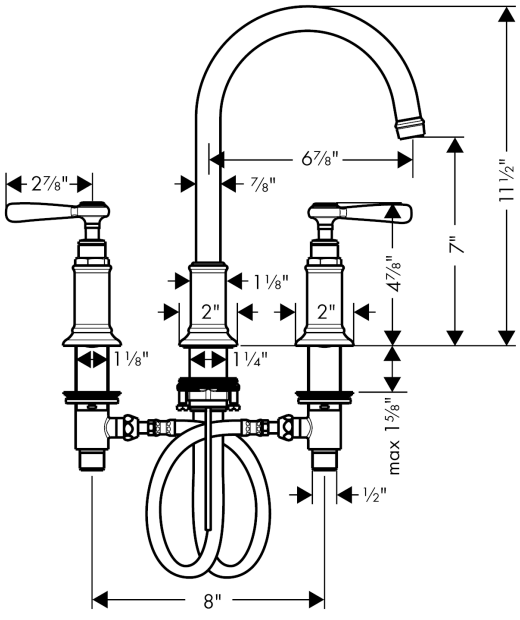
Scale drawing