KS2361,2,5,8TL
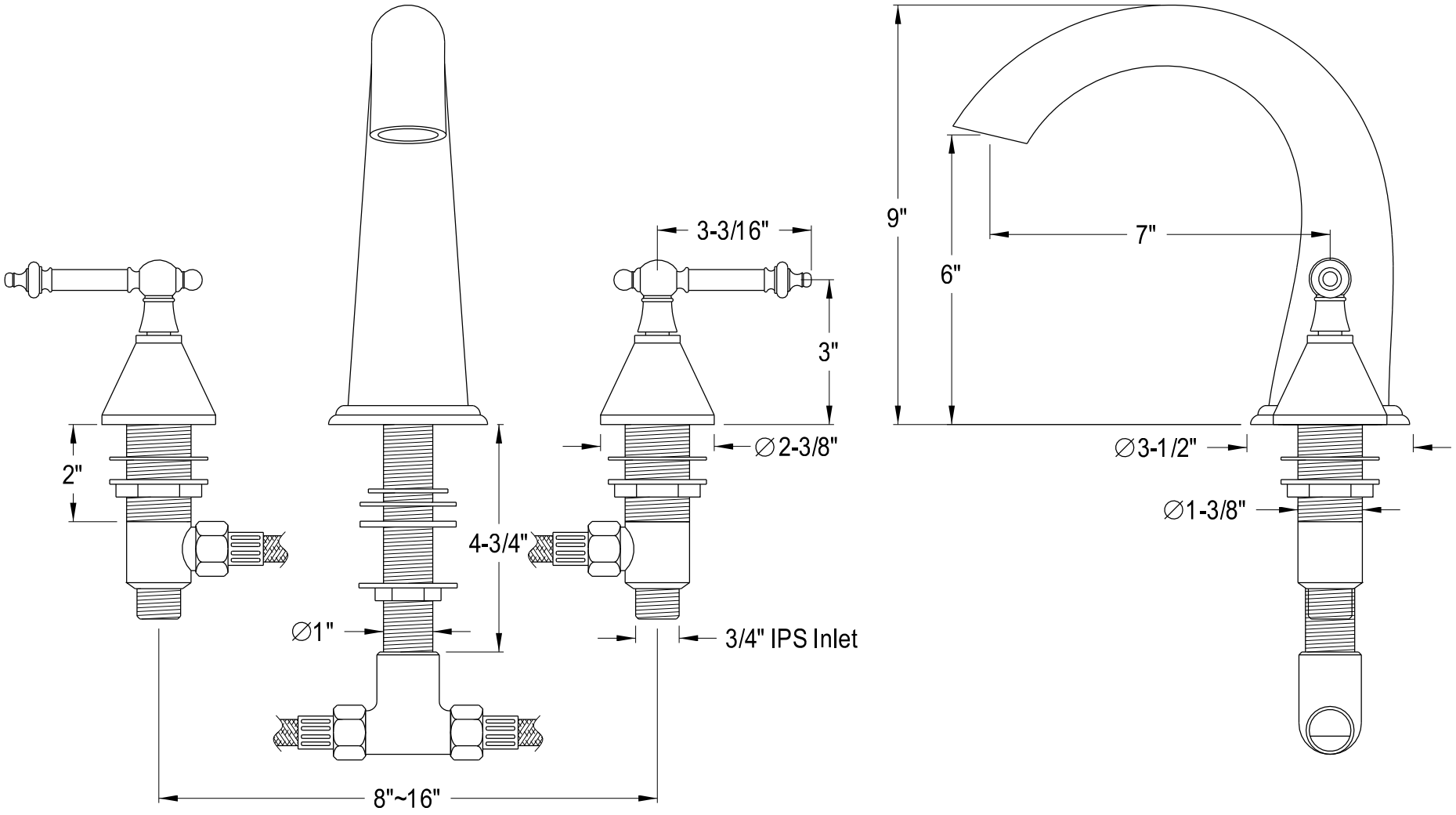
Roman Tub Filler