KOHLER®

Roughing-In

K-3206
BALLAD
SELF-RIMMING UTILITY SINK

Product Information

Applicable product:		
4-hole utility sink	K-3206-4	shown
3-hole utility sink	K-3206-3	shown

Fixture*:	
Basin area	21″ (53.3 cm) x 16″ (40.6 cm)
Water depth	10″ (25.4 cm)
Drain hole	3-5/8″ (9.2 cm) D.
Faucet holes	1-7/16″ (3.7 cm) D.
*Approximate measurements for comparison only.	

Included components:	
Fastener pack	1023180

Installation Notes

Install this product according to the installation guide.

Cutout is 24-1/2″ (62.2 cm) x 21-1/2″ (54.6 cm) with 1/2″ (1.3 cm) radius corners.

Fixture dimensions are nominal and conform to tolerances in ASME Standard A112.19.3.

K-3206-4

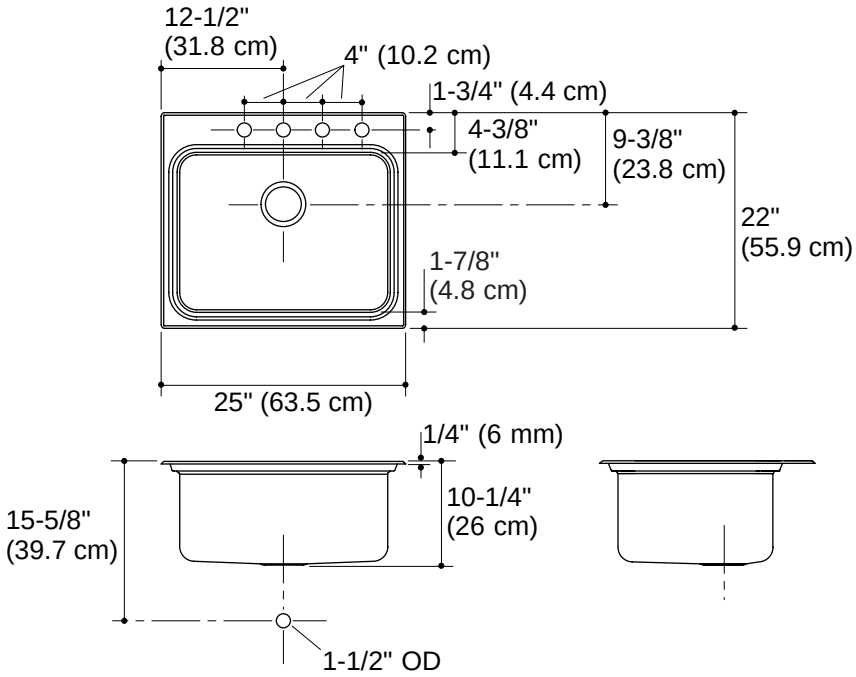
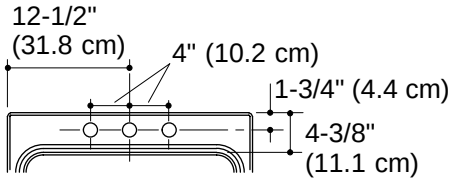
K-3206-3