KOHLER®

Roughing-In

K-3946
ADAIR
COMFORT HEIGHT® CLASS FIVE® TOILET

Product Information

Applicable product:	
Comfort Height Class Five Toilet	K-3946

Fixture:	
Configuration	one-piece, elongated
Water per flush	1.28 gpf (4.8 lpf)
Passageway	2-1/8″ (54 mm)
Water area	11″ (279 mm) x 7-3/4″ (197 mm)
Water depth from rim	6-1/16″ (154 mm)
Seat post hole centers	5-1/2″ (140 mm)

Included components:	
Tank cover	1180586
Trip lever	1059436
Toilet seat	K-4636
Tank accessory pack	52265
Bolt cap accessory pack	52048

Installation Notes

Install this product according to the installation guide.

Will comply with the American Disabilities Act **(ADA)** when installed per the requirements of the 2010 ADA Standards for Accessible design, Section 604 Water Closets. The Model Plumbing Codes require the installation of elongated open-front toilet seats in public bathrooms.

Will comply with **CSA B651** when installed per Clause 4.3.6 of the standard.

Will comply with **OBC** when installed per Clause 3.8.3.8 and 3.8.3.9.
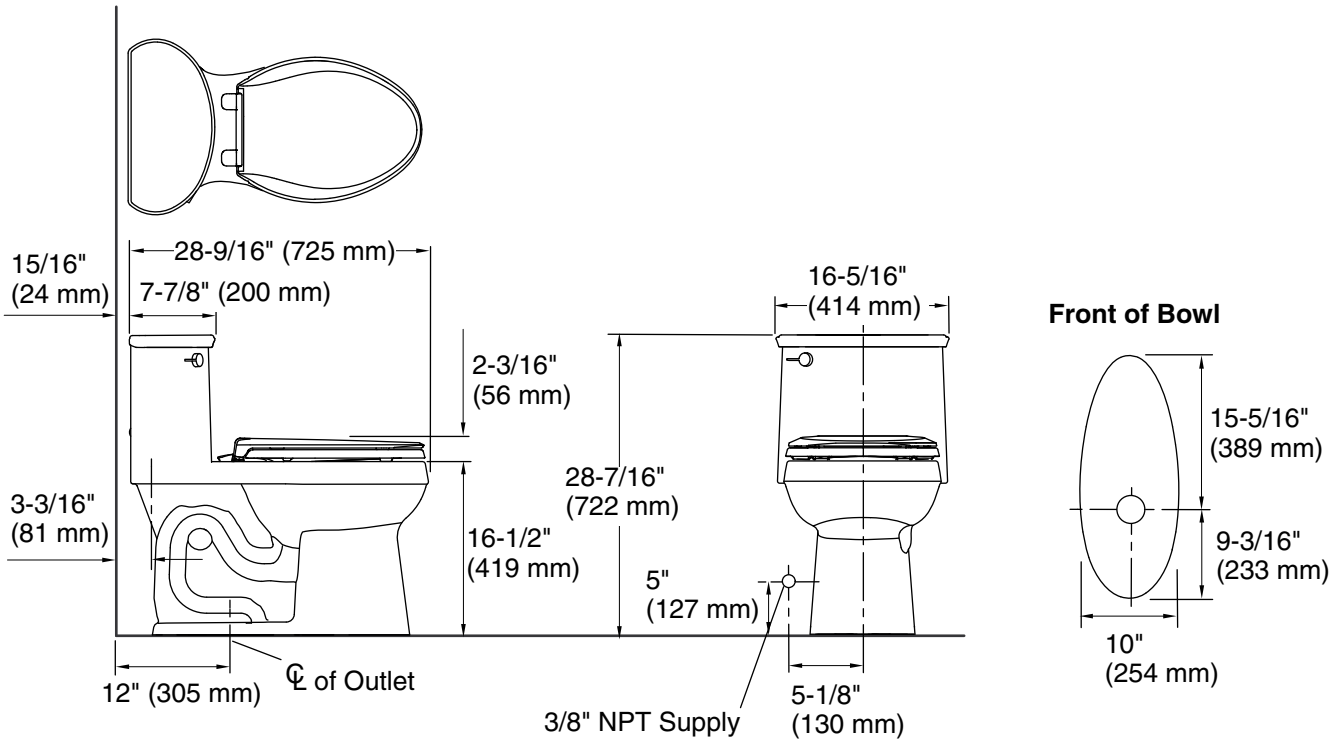
Fixture conforms to ASME Standard A112.19.2/CSA B45.1. All dimensions are nominal.