KOHLER®

Roughing-In

K-6303
VEIL
WALL-HUNG TOILET

Product Information

Applicable product:	
Wall-hung toilet with in-wall tank and carrier system	K-6303

Fixture:	
Configuration	Wall-hung elongated bowl toilet
Water per full flush	1.6 gpf (6 lpf)
Water per half flush	0.8 gpf (3 lpf)
Passageway	2-1/4″ (57 mm)
Water area	4-1/2″ (114 mm) x 5-1/2″ (140 mm)
Seat post hole centers	5-1/2″ (140 mm)

Included components:	
Bowl	K-6299
Toilet seat	K-4008
In-wall tank and carrier system	K-6284
Dual flush actuation plate	K-6298

Installation Notes

Install this product according to the installation guide.

Refer to manufacturer and local codes for flush valve requirements.

In-wall tank and carrier system install in wall opening 5-1/2″ (140 mm) x 19″ (483 mm) x 50″ (1270 mm) minimum.

Will comply with the American Disabilities Act **(ADA)** when installed per the requirements of the 2010 ADA Standards for Accessible design, Section 604 Water Closets. The Model Plumbing Codes require the installation of elongated open-front toilet seats in public bathrooms.
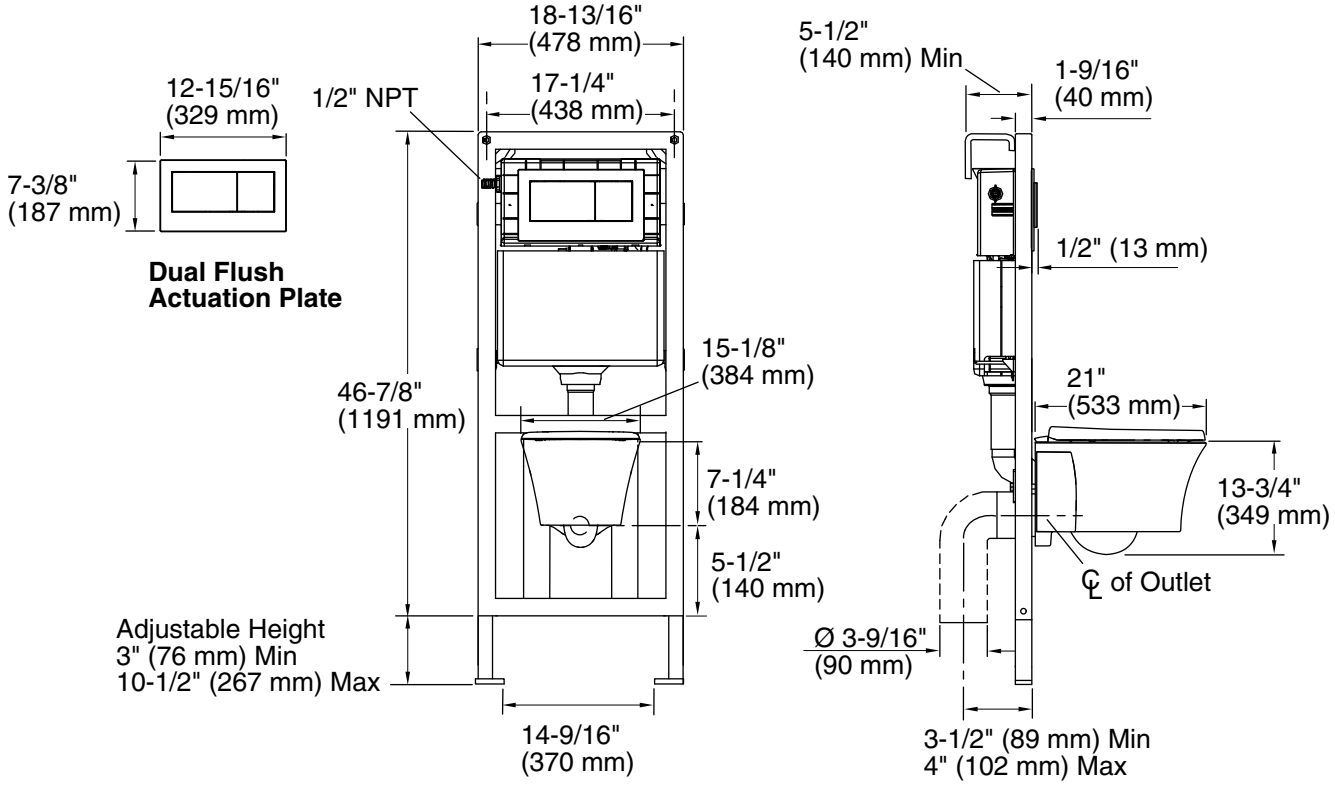
Fixture conforms to ASME standard A112.19.2/CSA B45.1. All dimensions are nominal.