CONCORD™

Model 012029

Description

- Acrylic handles
- Chrome plated metal housing
- Cast brass waterway
- 8" On-center installation
- 1/2" Brass IPS connections with brass coupling nuts
- Internal parts are interchangeable with genuine Delta® repair parts

Performance

- Designed to provide 2.2 GPM at 60 PSI

Compliance

- Designed to comply with requirements of ASME A112.18.1
- Meets low lead requirements of NSF Standard- 61, Section- 9
- Meets low lead requirements of California Proposition- 65
- Complies with the requirements of the UPC (Uniform Plumbing Code)
- Meets or exceeds CSA B125

Listings

- IAPMO (International Association of Plumbing & Mechanical Officials)
- cUPC (Uniform Plumbing Code & Canadian Uniform Plumbing Code)

Warranty

- Limited Lifetime Warranty

  Refer to Premier Faucet warranty program for further details and restrictions.

Model 012029

Twin Acrylic Handle Kitchen Faucet
Chrome Plated Finish
Less Spray
1/2" IPS Connection

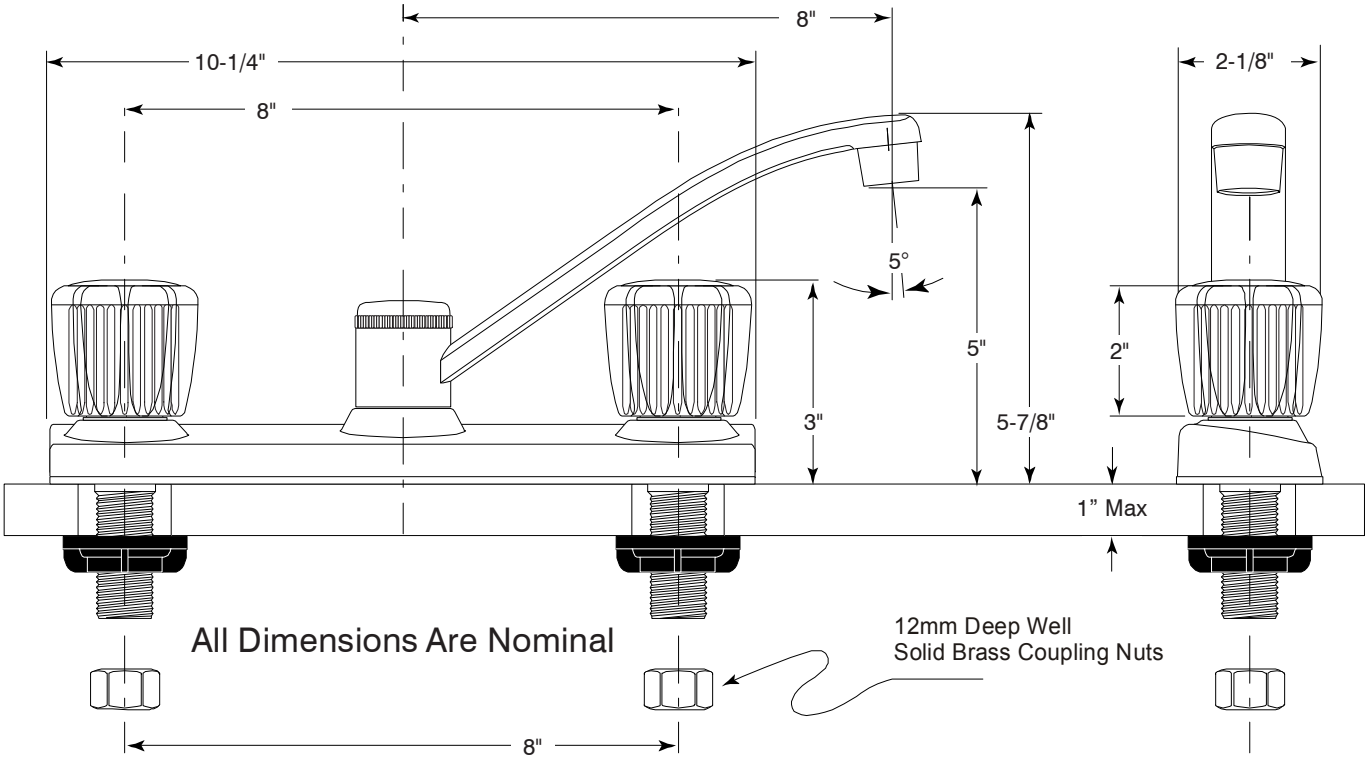

For additional information contact Premier Faucet at 866-745-4010 or visit our website at www.premierfaucet.com

© Premier Faucet 2007