SPECIFICATIONS

OPULENCE™ SINGLE HANDLE BAR & CONVENIENCE FAUCET

Model

D151557 (Replaces D153157 series)

Description

- Ceramic disc valve
- 9 ¾" high swivel spout, 5 ½" spout length
- Single hole mount

Standards

Certified to NSF/ANSI 61 Section 9

- NSF 61-9
- Energy Policy Act of 1992

NSF/ANSI 372

- ASME A112.18.1M/A112.18.1
- NSF/ANSI 372
- CSA B125.1

- ADA Accessibility Guidelines for Buildings and Facilities - 4.27.4 Controls and Mechanisms

Warranty

Danze products are covered by a manufacturer's limited "lifetime" warranty for manufacturing defects.

Flow Rate

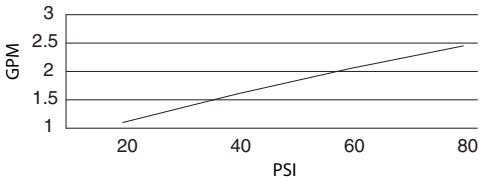

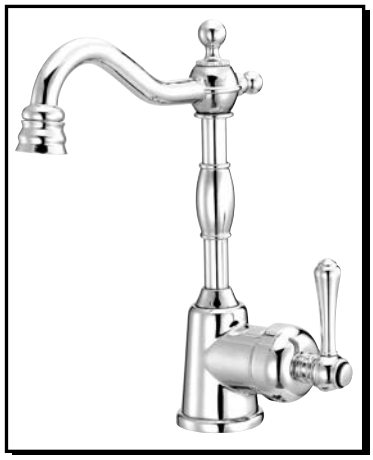

Finishes Available

- Chrome
- Other: Refer to Price List for additional finish

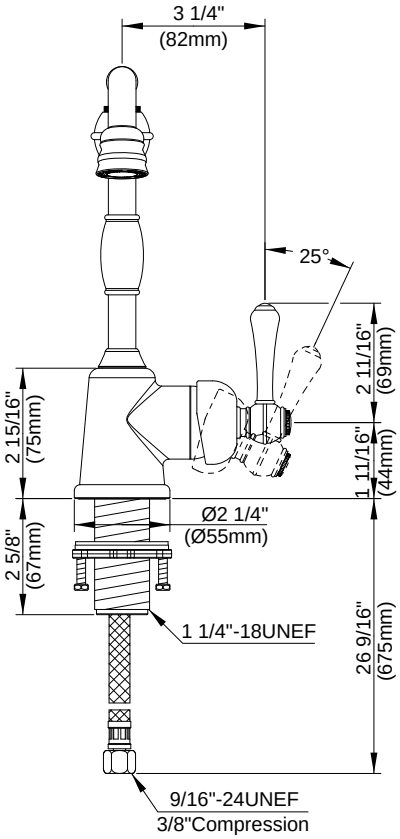

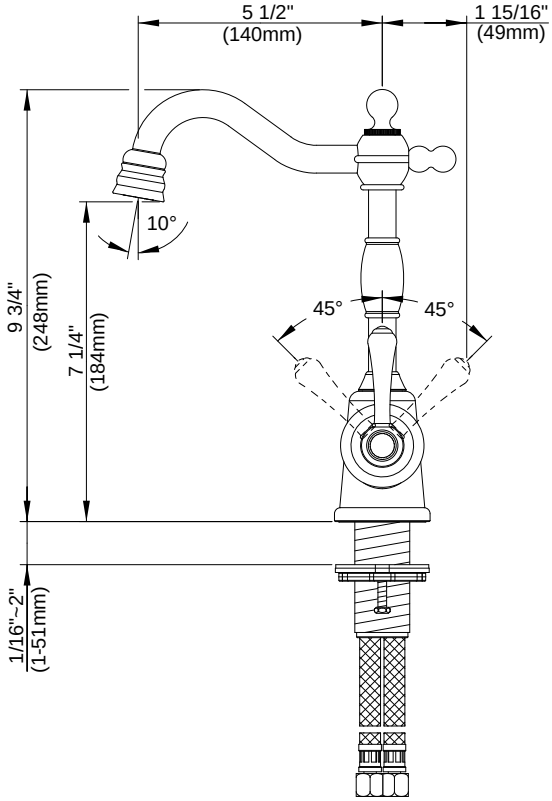

Submittal Information:

Job Name: _____ *Location:* _____

Contractor: _____ *Contact #:* _____