S/E Towel Bar, 24"
Finishes : **Brushed Nickel** Part no. : **40516820**

Description

Features

- Brass
- Metal holder

Item details

List Price	$ 142.00

Product image
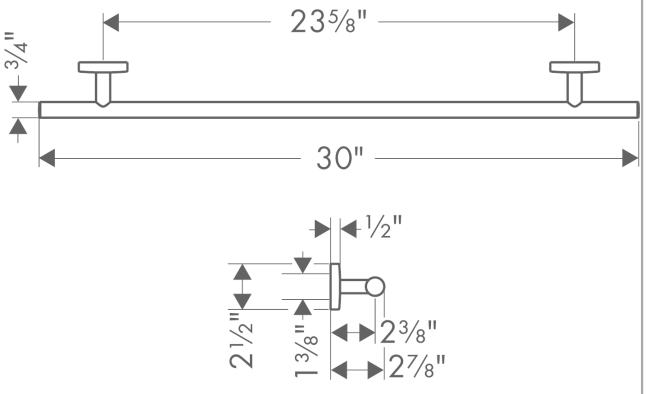
Scale drawing