MODEL: 50029SS

PACKING DIAGRAM

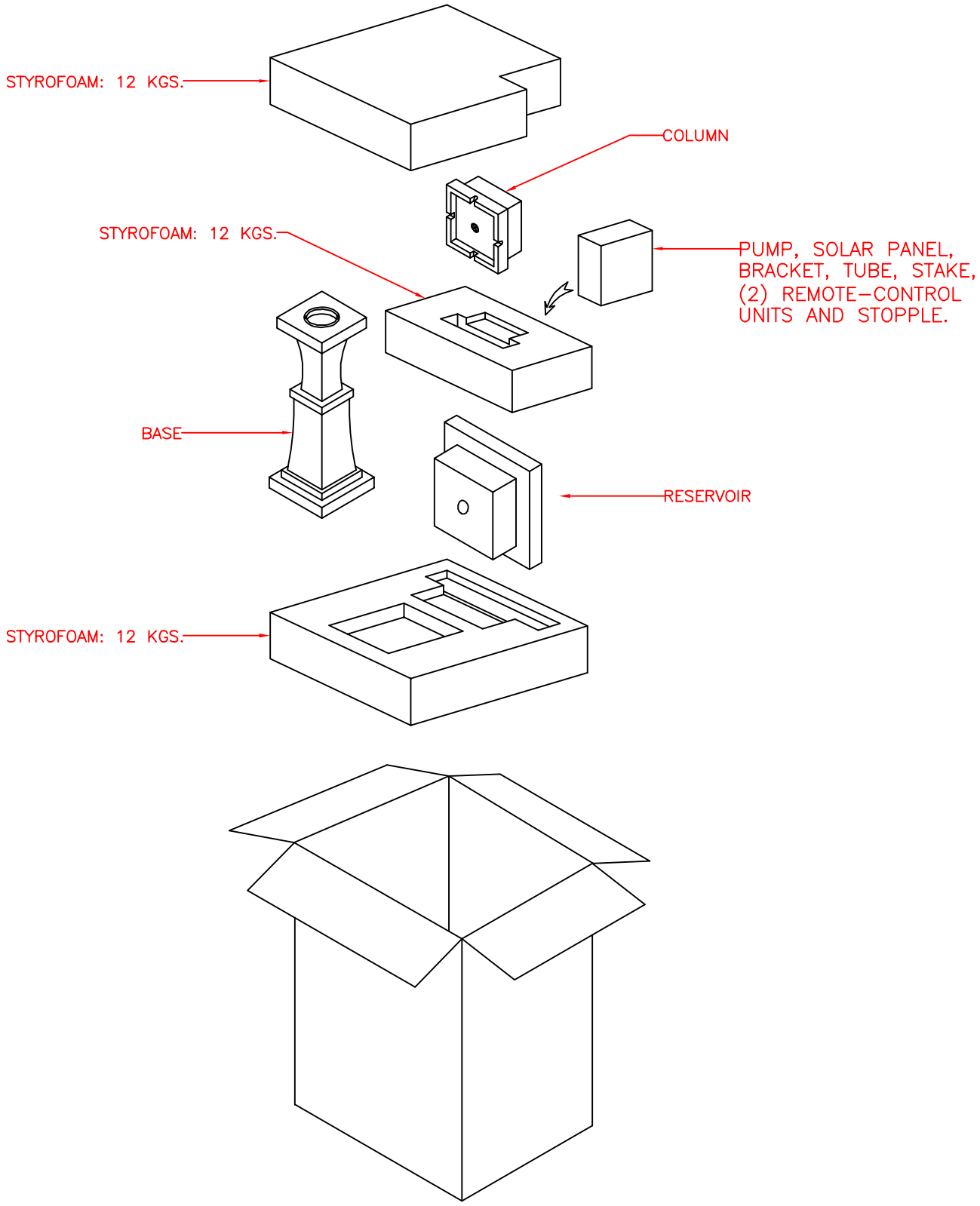

MODEL: 50029SS

ASSEMBLY INSTRUCTIONS

READ AND SAVE THESE INSTRUCTIONS

READ INSTRUCTIONS ALL THE WAY THROUGH PRIOR TO ASSEMBLY.

THIS FOUNTAIN SHOULD TAKE APPROXIMATELY 10 MINUTES TO ASSEMBLE.

MAKE SURE ALL PARTS ARE FIRMLY TIGHTENED.

UNPACK THE FOUNTAIN

YOU SHOULD HAVE RECEIVED THE FOLLOWING PARTS: COLUMN, RESERVOIR, BASE, PUMP, SOLAR PANEL, BRACKET, TUBE, STAKE, (2) REMOTE-CONTROL UNITS, STOPPLE AND (4) RECHARGEABLE "AA" BATTERIES. TO PROTECT THE FINISH, PLACE ALL PARTS ON A SOFT SURFACE.

FOUNTAIN ASSEMBLY

1. PLACE RESERVOIR ON TOP OF BASE AND TWIST THE RESERVOIR CLOCKWISE TO SECURE.

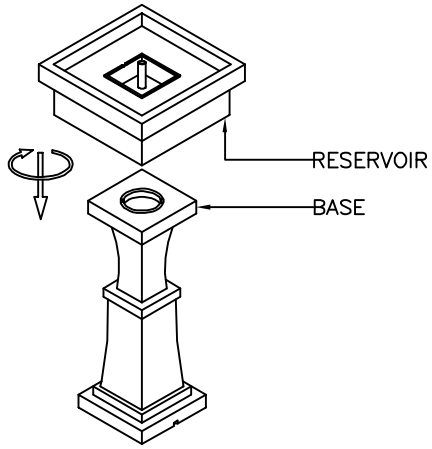

2. ATTACH THE PUMP TO RUBBER HOSE, FEED THE PUMP POWER CORD AND LIGHT POWER CORD THROUGH THE PLASTIC TUBE TOWARD BOTTOM OF BASE, CORDS EXIT OUT FROM CHANNEL ON THE BOTTOM OF THE BASE.

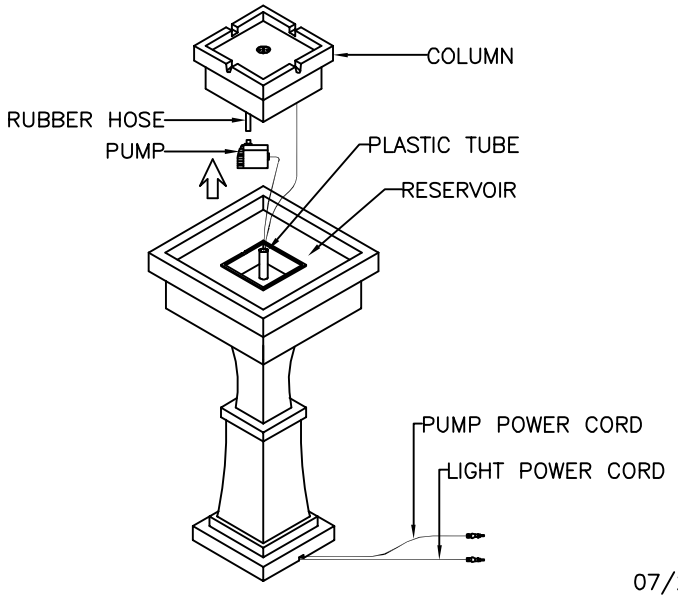

3. PULL THE EXCESS POWER CORDS THROUGH THE BASE, INSERT THE STOPPLE INTO PLASTIC TUBE TO COVER THE HOLE, THEN PLACE COLUMN INTO THE RESERVOIR.

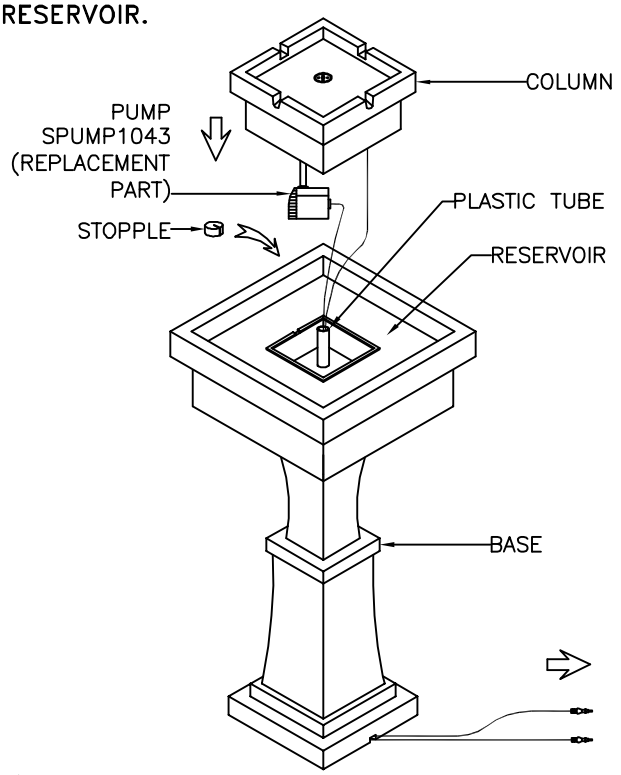

4. REMOVE COVER FROM BACK OF SOLAR PANEL BY UNSCREWING (4) SCREWS.

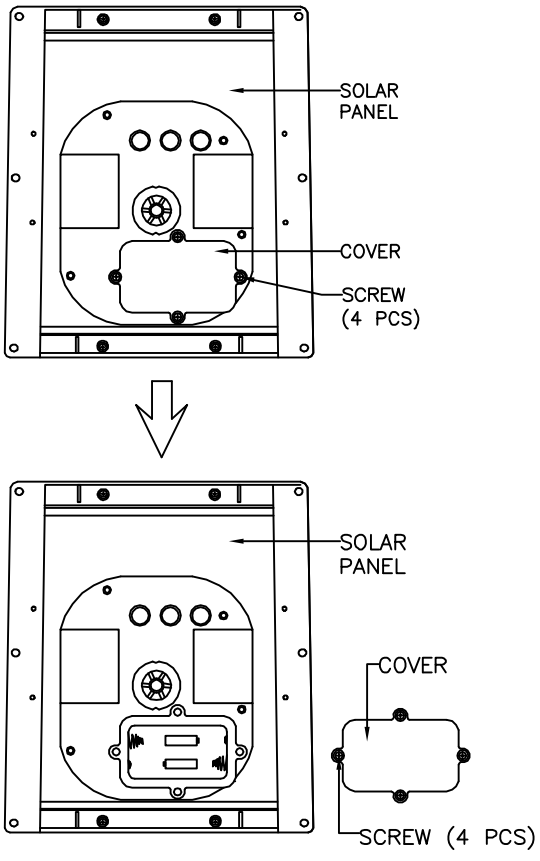

MODEL: 50029SS

ASSEMBLY INSTRUCTIONS

READ AND SAVE THESE INSTRUCTIONS

FOUNTAIN ASSEMBLY

5. PLACE (4) RECHARGEABLE "AA" BATTERIES (INCLUDED) INTO THE BATTERY BOX AS SHOWN.

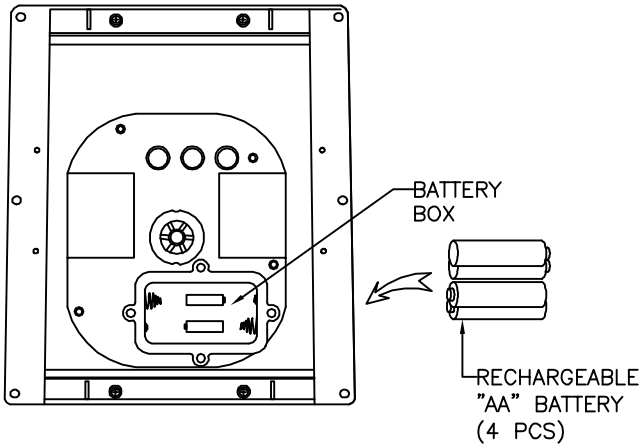

6. SECURE THE COVER TO BACK OF SOLAR PANEL WITH THE (4) SCREWS AS SHOWN.

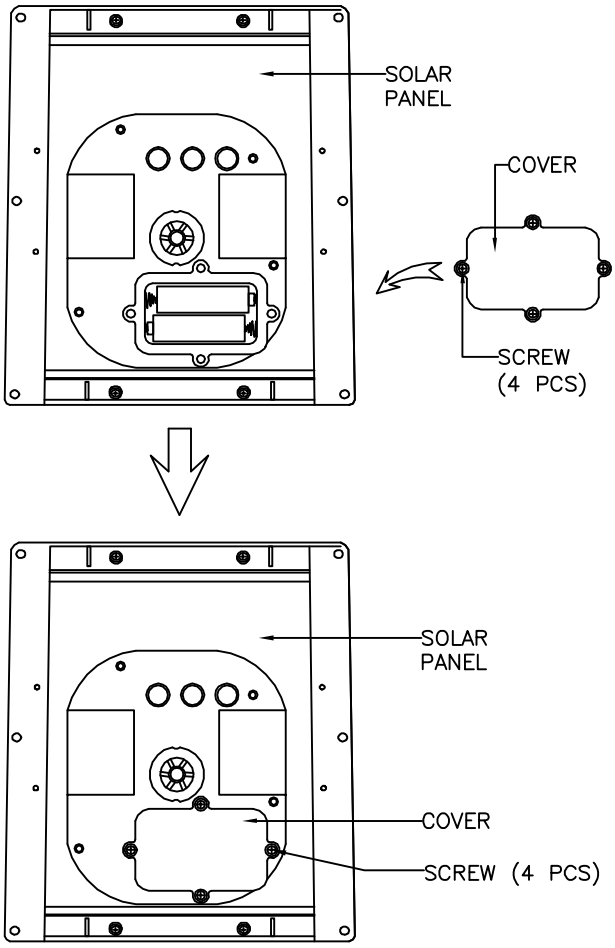

7. JOIN BRACKET, TUBE AND STAKE TOGETHER, THEN ATTACH BRACKET TO BACK OF THE SOLAR PANEL AS SHOWN.

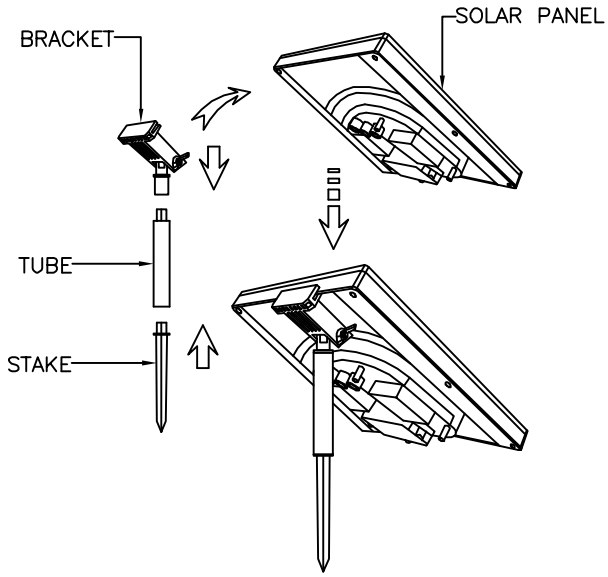

8. TWIST PUMP PLUG SLIGHTLY AND PUSHING IT INTO THE HOLE FOR PUMP PLUG, TWIST LIGHT PLUG SLIGHTLY AND PUSHING IT INTO THE HOLE FOR LIGHT PLUG, MAKE SURE THE SEALING RINGS ARE FULLY IN GROOVES.

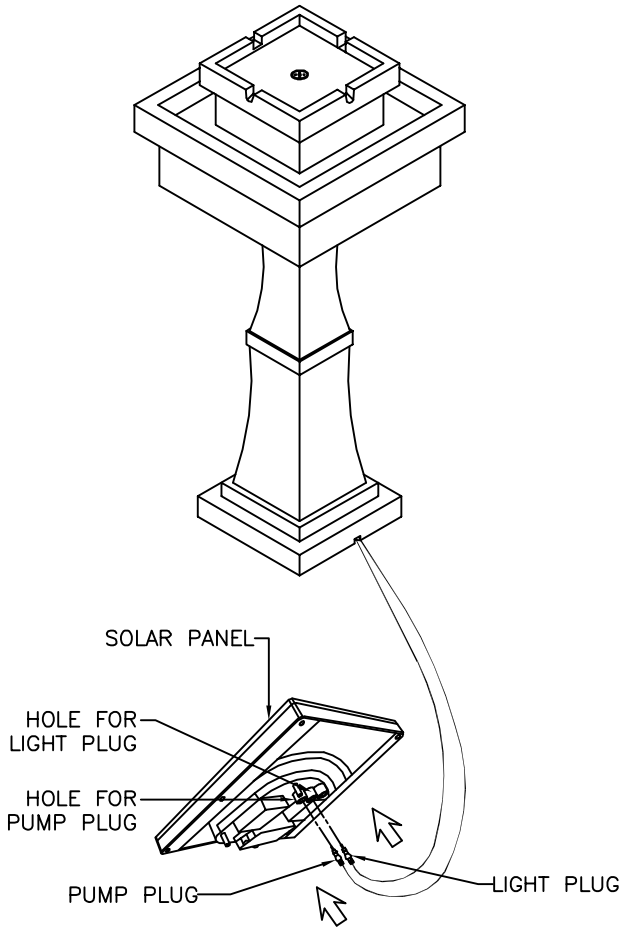

MODEL: 50029SS

ASSEMBLY INSTRUCTIONS

READ AND SAVE THESE INSTRUCTIONS

FOUNTAIN ASSEMBLY

9. INSERT STAKE INTO GROUND.

NOTE: YOU CAN ADJUST THE DIRECTION OF SOLAR PANEL BY LOOSING THE WING NUT.

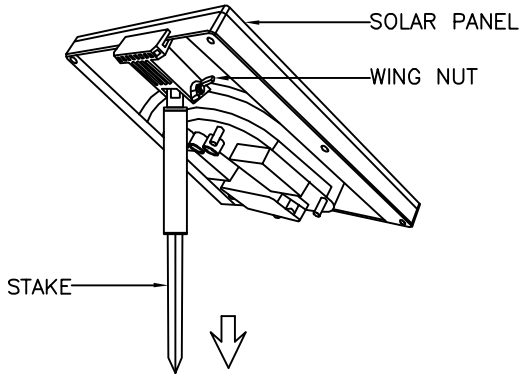

10. FILL THE RESERVOIR WITH 0.8 GALLONS OF WATER TO COMPLETELY SUBMERSE THE PUMP.

NOTE: DISTILLED WATER IS RECOMMENDED TO REDUCE MINERAL DEPOSITS AND BACTERIA BUILD-UP.

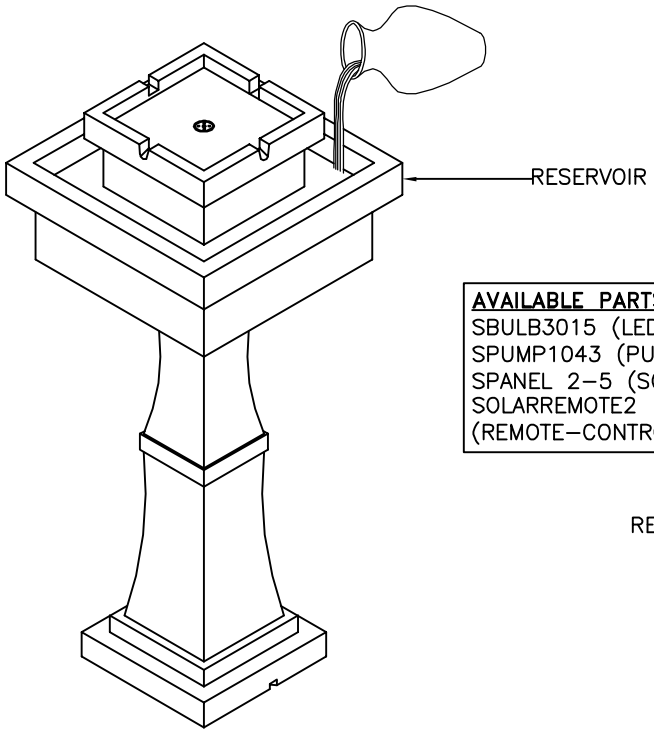

11. TURN ON THIS FOUNTAIN, YOUR NEW FOUNTAIN IS READY FOR USE.

* PRESS "A" TO TURN ON/OFF THE PUMP AND THE LED LIGHTS. (NOTE: LED LIGHTS ONLY WORK AT NIGHT)

** PRESS "B" TO ADJUST PUMP TO ACHIEVE VARIABLE WATER FLOW.

*** REMOTE-CONTROL UNIT EFFECTIVE DISTANCE: 32 FEET.

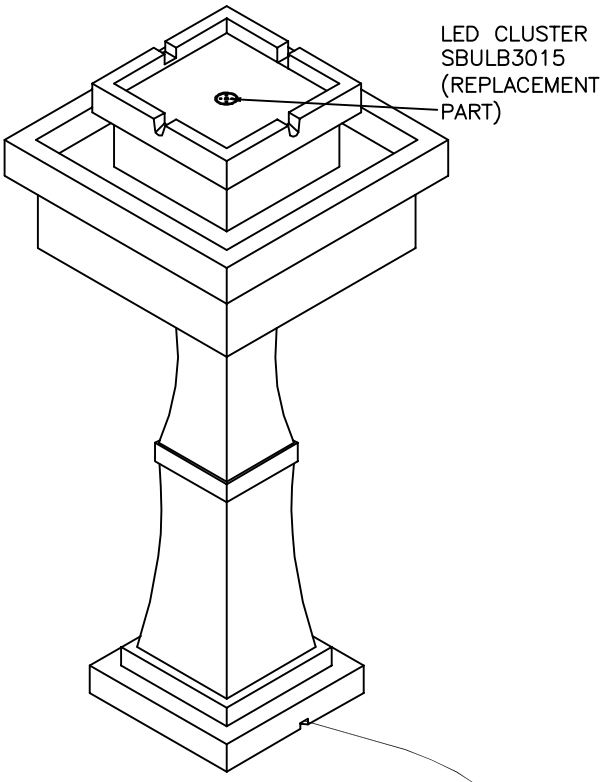

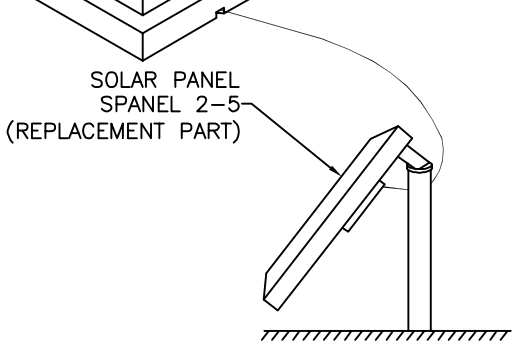

AVAILABLE PARTS ARE:
SBULB3015 (LED CLUSTER)
SPUMP1043 (PUMP)
SPANEL 2-5 (SOLAR PANEL)
SOLARREMOTE2
(REMOTE-CONTROLN UNIT)

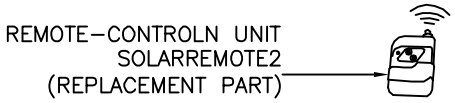

MODEL: 50029SS

ASSEMBLY INSTRUCTIONS

READ AND SAVE THESE INSTRUCTIONS

TROUBLE SHOOTING:

1. IF YOUR FOUNTAIN DOES NOT WORK, CHECK SOLAR PANEL IS IN CORRECT POSITION, RECEIVING SUNLIGHT AND NOT IN SHADOW.

2. CHECK CONNECTIONS BETWEEN THE PUMP/LED AND THE SOLAR PANEL.

3. CHECK WATER LEVEL AND MAKE SURE THE PUMP IS SUBMERGED.

4. IF THE FOUNTAIN STILL DOES NOT WORK, PLEASE CONTACT YOUR DISTRIBUTOR OR PLACE OF PURCHASE.

SPLASHING DISCLAIMER:

SPLASHING MAY OCCUR WHEN FOUNTAIN IS INITIALLY TURNED ON. PROTECT SURROUNDING SURFACES AS NEEDED.

IMPORTANT PUMP INFORMATION:

PUMP MUST BE FULLY SUBMERSED IN WATER WHILE OPERATING.

WATER:

TO REDUCE MINERAL DEPOSITS AND BACTERIA BUILD UP THE USE OF DISTILLED WATER IS RECOMMENDED.

MEMORY FUNCTION:

THE MEMORY FUNCTION IS DESIGNED TO REMEMBER THE TIME WHICH YOU TURN ON THE SOLAR PUMP OF THE LAST TIME. THIS FUNCTION WILL THEN SWITCH ON THE PUMP AT THAT TIME EVERY DAY.

NOTE: YOU CAN TURN OFF THE MEMORY FUNCTION ON THE BELOW CONDITION:

1. PRESS "A" OF THE REMOTE-CONTROL UNIT TO TURN OFF THE PUMP AND THE LED LIGHTS DURING 3H RUNNING TIME.
2. RE-PLUG-IN THE PUMP PLUG AND LIGHT PLUG.
3. TAKE OFF BATTERIES.

IMPORTANT NOTES:

1. SOLAR PUMP WILL KEEP RUNNING FOR 3 HOURS EACH TIME (3H TIMER) AFTER YOU TURN ON IT.

2. THE LED LIGHTS WILL TURN ON AUTOMATICALLY EVERY NIGHT WHEN THIS FOUNTAIN IS TURNED ON.

3. ALTHOUGH THERE MAY BE SOME INITIAL CHARGE IN BATTERY, WE RECOMMEND FULLY CHARGING IT BEFORE FIRST USE. TURN OFF THE SOLAR PUMP AND LEAVE THE FOUNTAIN IN GOOD SUNLIGHT FOR 6 HOURS TO ENSURE THE BATTERY PACK IS FULLY CHARGED.

4. TO GET BEST PERFORMANCE FROM THE SOLAR PANEL IN THE SUNSHINE, PLEASE MAKE SURE THAT YOU PERIODICALLY CLEAN THE TOP SURFACE OF THE SOLAR PANEL (DO NOT USE A CHEMICAL SOLVENT).

WARNING:

* ONCE A WEEK INSPECT FOUNTAIN, FLOOR AND ADJACENT WALL FOR MOISTURE BUILD-UP AND CLEAN AS NECESSARY. THIS IS ESPECIALLY IMPORTANT FOR HUMID ENVIRONMENTS.

** THIS FOUNTAIN IS RATED FOR OUTDOOR USE.

*** MOVE YOUR FOUNTAIN INTO YOUR ROOM IN FREEZING DAYS TO PROTECT THE FOUNTAIN.

**** IF YOU DO NOT WANT TO USE THIS FOUNTAIN FOR LONG TIME, PLEASE UNPLUG THE PUMP PLUG FROM BOTTOM OF SOLAR PANEL.

BATTERY PACK INFORMATIONS:

* RECHARGABLE BATTARIES BECOME LESS EFFICIENT WITH REPEATED CHARGE AND DISCHARGE CYCLES, THE CAPACITY OF THE BATTERIES MAY REDUCE OVER TIME. IF YOU FIND THAT THE BATTERIES APPEAR LESS EFFICIENT, TRY TO BOOST CHARGE IT. TO DO THIS, LEAVE OFF THIS FOUNTAIN FOR 2~3 DAYS IN SUNNY DAYS TO ALLOW THE MAXIMUM CHARGE TO THE BATTERIES. WE RECOMMEND THAT YOU DO THIS OCCASIONALLY TO HELP PROLONG THE LIFE OF BATTERIES. IF YOUR BATTERIES STILL DOES NOT WORK WELL AFTER THIS BOOST CHARGE, YOU SHOULD REPLACE THE BATTERIES.

** AFTER THE BATTERIES USED FOR 12~18 MONTHS, IT MAY HAVE REACHED IT'S SERVICE LIFE, YOU SHOULD REPLACE THE BATTERIES.