Installation Instructions

Shower Enclosures: Heavy Frameless Pivot Door

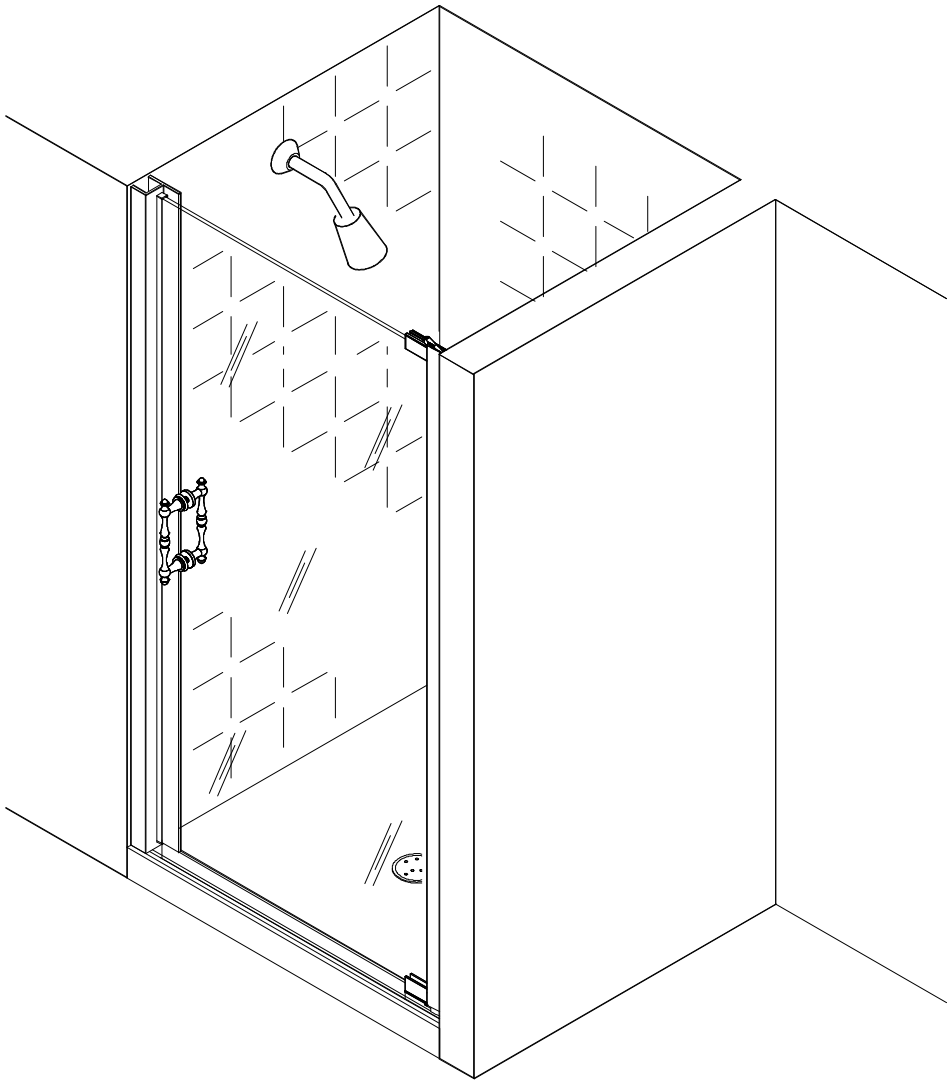

SAVE THESE INSTALLATION INSTRUCTIONS FOR FUTURE REFERENCE AND IN THE EVENT YOU NEED TO ORDER A REPLACEMENT PART.

RECORD THE MODEL#_____GLASS_____FINISH_____

FROM THE PRODUCT LABEL ON THE PACKAGE

IF YOU NEED REPLACEMENT PARTS OR HAVE INSTALLATION QUESTIONS, PLEASE CALL OUR CUSTOMER SERVICE REPRESENTATIVES.

WHEN CALLING FROM USA, CALL 800-355-5397

MONDAY - FRIDAY 8:30am **- 4:00**pm **EASTERN TIME.**

WHEN CALLING FROM CANADA, CALL 888-304-4388

MONDAY - FRIDAY 8:00am **- 5:00**pm **EASTERN TIME.**

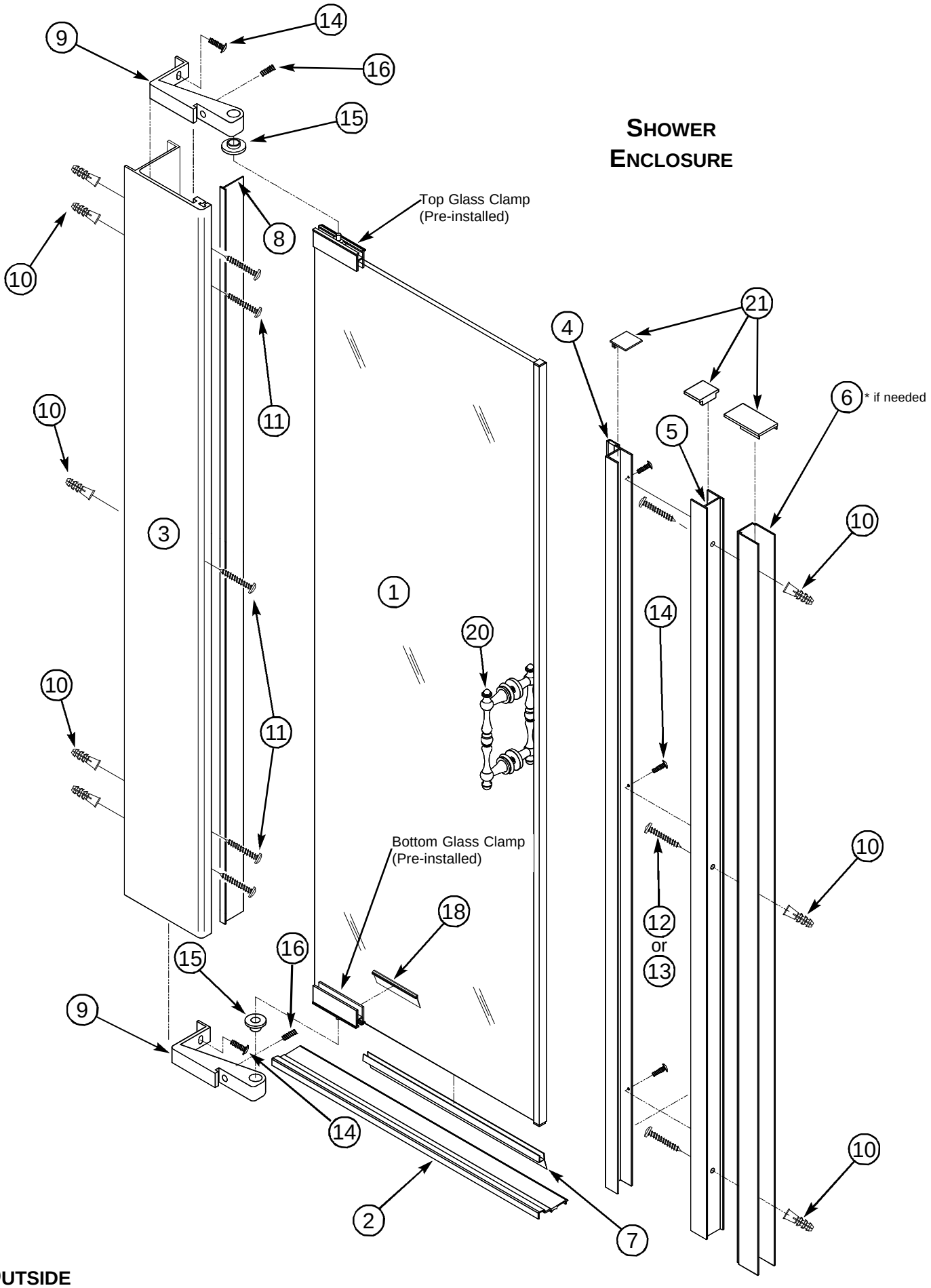
SHOWER
ENCLOSURE
Top Glass Clamp
(Pre-installed)
Bottom Glass Clamp
(Pre-installed)
* if needed
or
OUTSIDE

Item #	Part Description	Qty.
1	Door	1
2	Bottom Track	1
3	Pivot Wall Channel	1
4	Magnetic Jamb	1
5	Adjustable Wall Channel	1
6 *	Wall Filler (If Applicable)	1
7	Drip Shield	1
8	Seal Strip	1
9	Pivot Bracket	2
10	Wall Anchor	8
11	#10 x 1 1/4" lg. Flat Head Screws	5
12	#10 x 2 1/4" Long Screw	3
13	#10 x 1 1/4" Long Screw	3
14	#8 x 3/8" Long Screw	5
15	Nylon Bushing	2
16	#8 x 3/16" Long Set Screw	2
17	5/64 Allen Wrench	1
18	Glass Clamp Splash Guard	1
19	Track and Door Install Block	2
20 **	Handle Set	1
21	Adjustable Top Cap (Set)	1

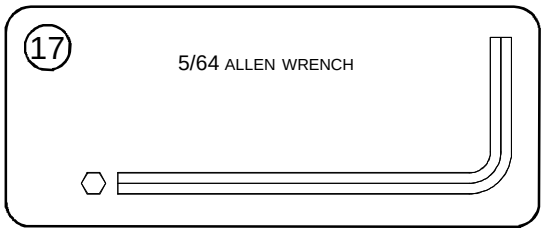

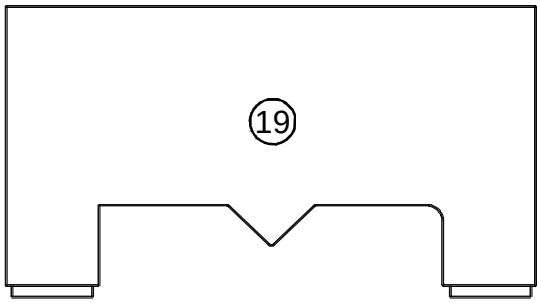

* *If necessary (Check SPECIFICATIONS TABULATION)*
** *Handle shown may differ from the one supplied with your model*

If you need replacement parts, do not return the Shower Enclosure to the store, call us toll free for an immediate, courteous response.

When ordering replacement parts, please specify the Model Number, Item Number & Part Description

To help identify the proper parts, please refer to the last page for Illustrations of Parts. Assembly hardware is shown throughout the Installation Instructions, at actual size, for ease of identification.

Additional Screws and Wall Anchors are included in the Parts Bag for your convenience.

Unpacking:
Care should be taken when unpacking your Shower Enclosure. Place the Door in an upright, safe location to avoid damage.

Cleaning:
Never use scouring powder, pads or sharp instruments on metal work or Door. We recommend the use of a squeegee after each shower to eliminate water spots on the inside of the Door.
An occasional wiping down of the Door and anodized aluminum parts with a mild detergent, diluted in water, is all that is needed to keep your Shower Enclosure looking brand new.

Carefully read the Installation Instructions ***BEFORE*** you start. This will enable you to become familiar with the installation sequences and the required tools.

Tools Required
For installation of your Shower Enclosure, you will need the following tools:

A - Safety glasses.
B - Measuring tape.
C - Pencil.
D - Hack saw *(with 32 teeth per inch blade)*.
E - Miter Box or Square.
F - Level.
G - Electric Drill.
H - Center punch.
I - Drill bit, 1/8" *(for installation on a fiberglass enclosures)*
Drill bit, 1/4" masonry *(for installation on ceramic tiles or marble)*
J - Power screwdriver or a #2 phillips screwdriver.
K - #2 phillips screwdriver
L - Caulking gun
M - 5/64" Allen Wrench (included)

Materials Required
For installation of your Shower Enclosure, you will need the following materials:
A - Masking tape.
B - Silicone sealant.

SPECIFICATIONS TABULATION

Pivot Door Width Dimension	Fits in the Following Opening (Minimum - Maximum)	Wall Filler Required If Opening is Between
24"	**23 3/4" to 26 1/2"**	**25 1/2" to 26 1/2"**
27"	**27 3/4" to 30 1/2"**	**29 1/2" to 30 1/2"**
30"	**30 3/4" to 33 1/2"**	**32 1/2" to 33 1/2"**
33"	**33 3/4" to 36 1/2"**	**35 1/2" to 36 1/2"**

WARNING : SAFETY GLASSES SHOULD BE WORN AT ALL TIMES.

1

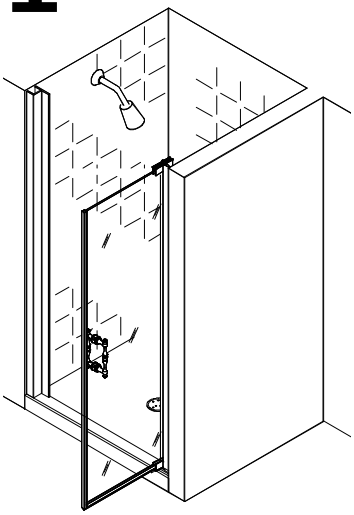

Please note; the hinge side of the Door should be ***OPPOSITE*** the Shower Head when possible.

Use these sketches as a guide to determine which side of the Shower Enclosure your Door should hinge.

Please note, this Shower Enclosure Door only swings **OUTWARD**. Be sure to allow enough room for it to open.

Shower head on ***LEFT***,
hinge Door on ***RIGHT.***

Shower head on ***RIGHT***,
hinge Door on ***LEFT.***

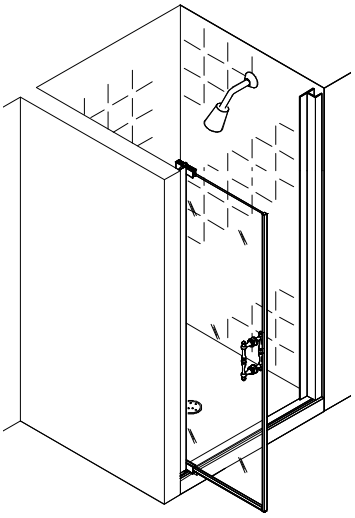

2

Measure the finished wall-to-wall distance, **DIMENSION D**, in the center of the Shower Enclosure **Ledge**.

If a steel tape is used, be sure to add the width of the case to the measurement.

Subtract 1/16" from **DIMENSION D**, this is your **Track Dimension**.

At this point, re-measure the wall-to-wall distance, **DIMENSION D,** and re-check subtraction, to be certain of the correct **Track Dimension.**

"MEASURE TWICE, CUT ONCE"

Measure the **"Track Dimension"** along the length of the Bottom Track. Carefully cut the Bottom Track.

Please note, to obtain the best results, use a 32-teeth per inch Hacksaw blade and a Miter Box.

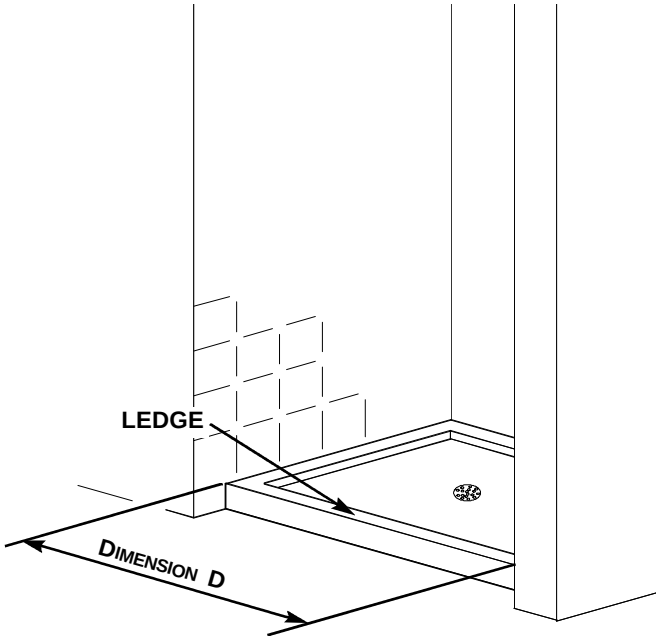

For some fiberglass Shower Enclosures, the ends of the Bottom Track may need to be "rounded" by filing to fit.

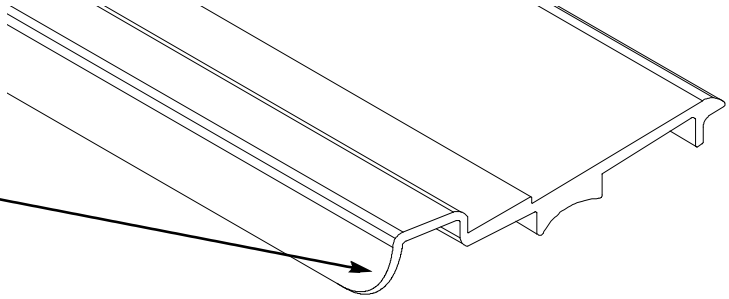

3

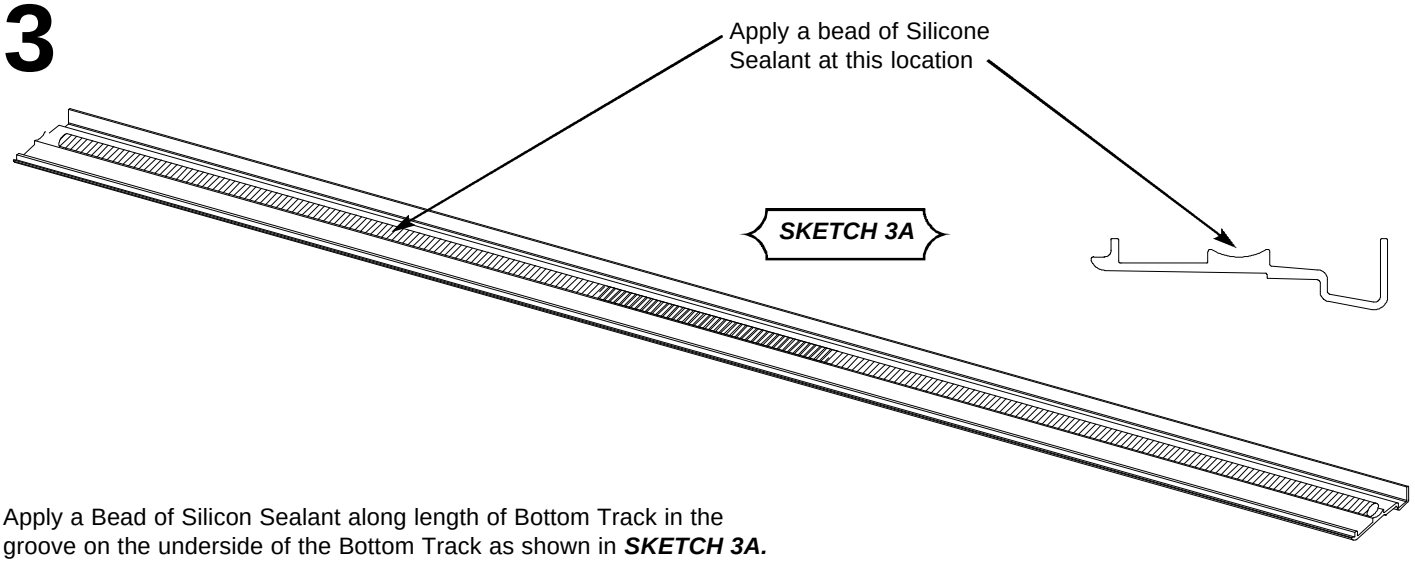

SKETCH 3A

Apply a Bead of Silicon Sealant along length of Bottom Track in the groove on the underside of the Bottom Track as shown in ***SKETCH 3A.***

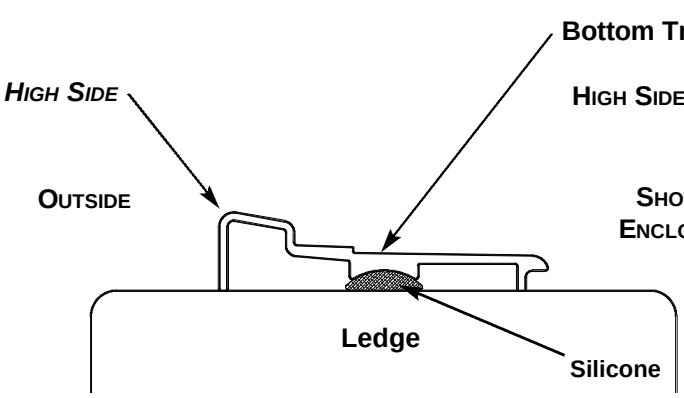

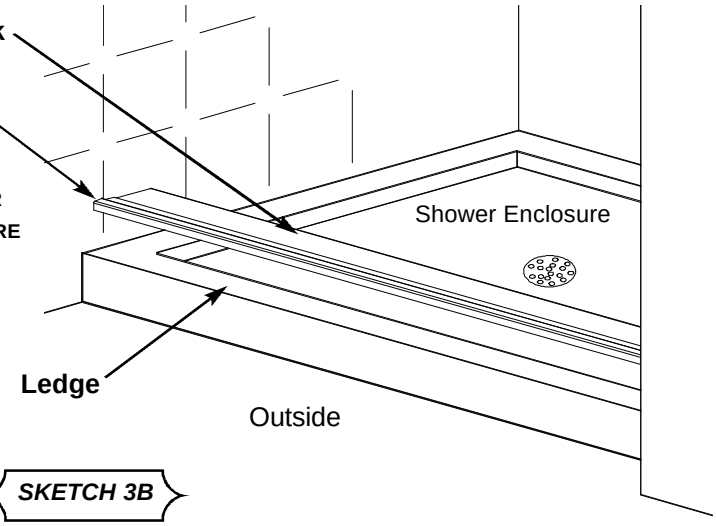

After applying Silicone Sealant to Bottom Track, position Bottom Track in center of Shower Enclosure Ledge with the **HIGH SIDE** located towards the outside, as shown in ***SKETCH 3B.***

SKETCH 3B

Remove the Release Film from the bottom of the Track and Door Install Blocks.

Install the **Track and Door Install Blocks** over the Bottom Track, placing them approximately 8” from each end of the Bottom Track, as shown in ***SKETCH 3C.***

Please note, the **Track and Door Install Blocks** serve two purposes: They hold the Bottom Track in position during the installation process and they help support the weight of the Glass Door while it is installed. *These blocks will be removed after Installation is completed.*

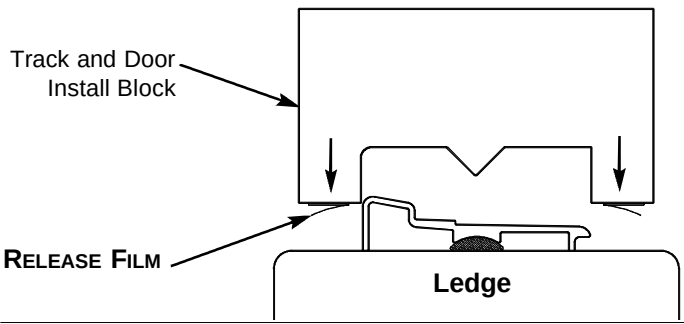

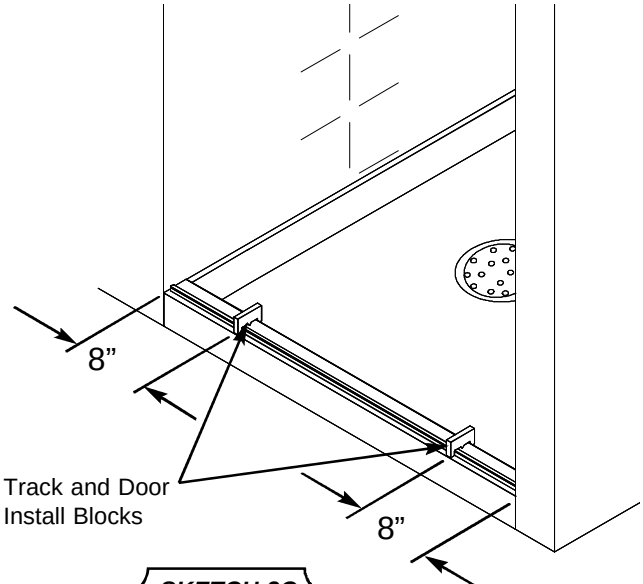

SKETCH 3C

4 Measure and cut the Seal Strip 1” shorter than the Pivot Wall Channel.

Please note, the Seal Strip may be Factory Installed. If so, remove only enough of the Seal Strip in order to cut off the excess.
Do **Not** Fully Remove Seal Strip to Cut.

Slide the Seal Strip into the Pivot Wall Channel, as shown in ***SKETCH 4A.***

Rubbing liquid soap on the bottom of the Seal Strip can make it slide easier into the Pivot Wall Channel.

Please note, the Seal Strip is molded at a slight angle. The Seal Strip must be installed angled inward, as shown in ***SKETCH 4B.***

Position Seal Strip 1/2” from end of Pivot Wall Channel, as shown in ***SKETCH 4C.***

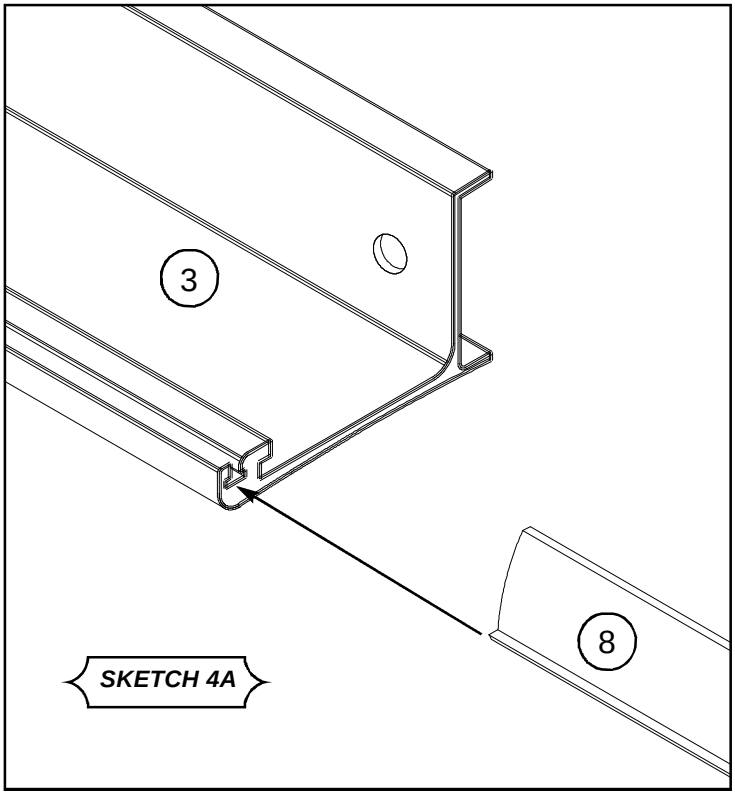

SKETCH 4A

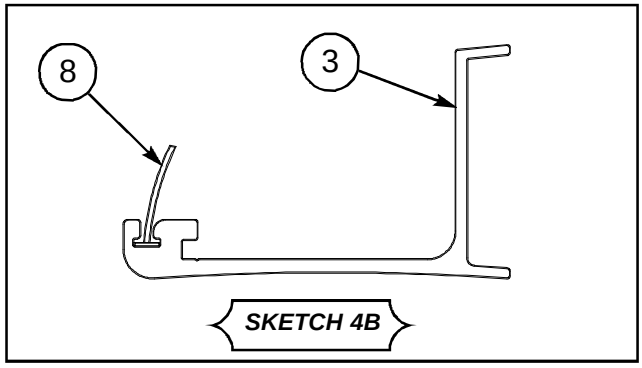

SKETCH 4B

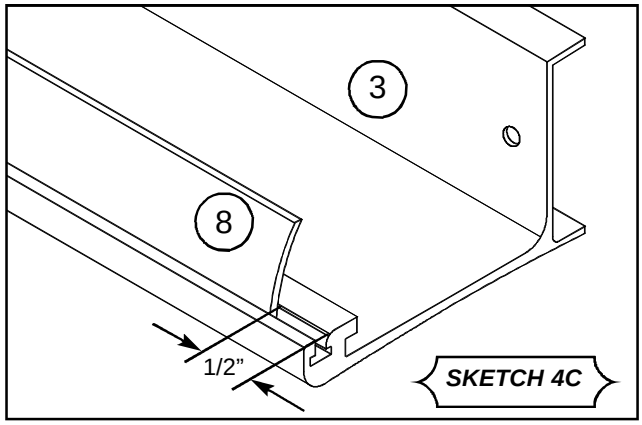

SKETCH 4C

Please note, DO <u>NOT</u> use a power screwdriver, use a #2 phillips head screw driver.
WARNING: DO NOT OVER TIGHTEN.

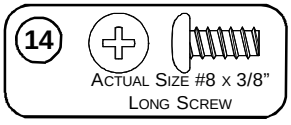

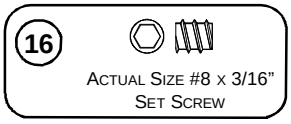

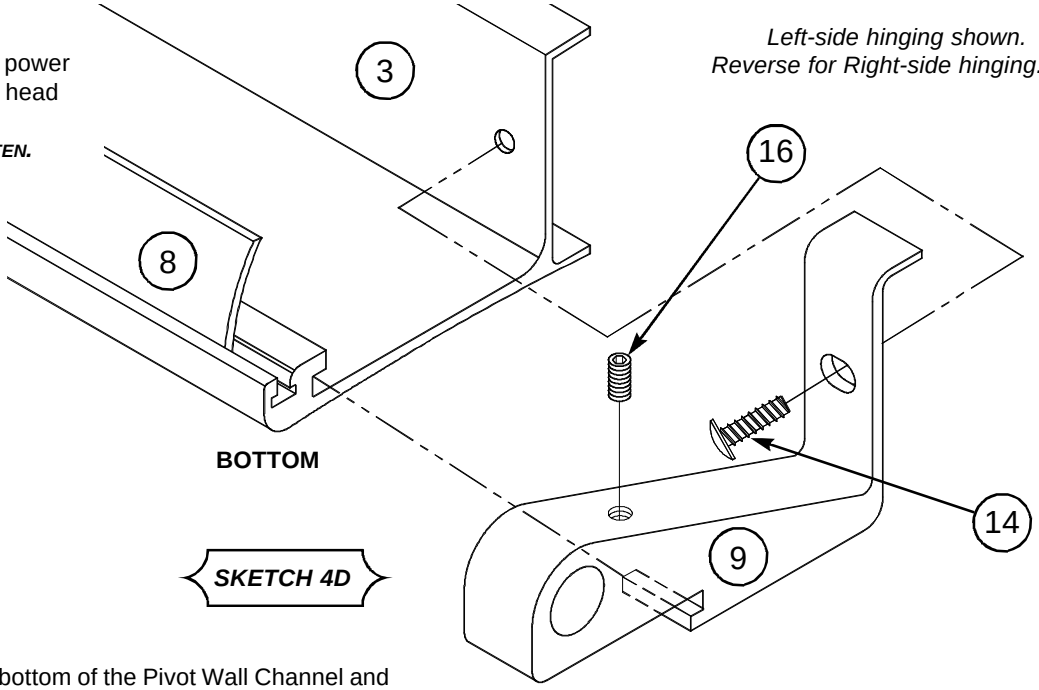

Left-side hinging shown.
Reverse for Right-side hinging.

SKETCH 4D

Mate the Pivot Bracket to the bottom of the Pivot Wall Channel and secure with a #8 x 3/8” long Screw, as shown in ***SKETCH 4D.*** Use a #2 Phillips Head Screw Driver to tighten.

Then insert a #8 x 3/16” Set Screw and tighten with the 5/64” Allen Wrench provided, as shown in ***SKETCH 4D.***

5

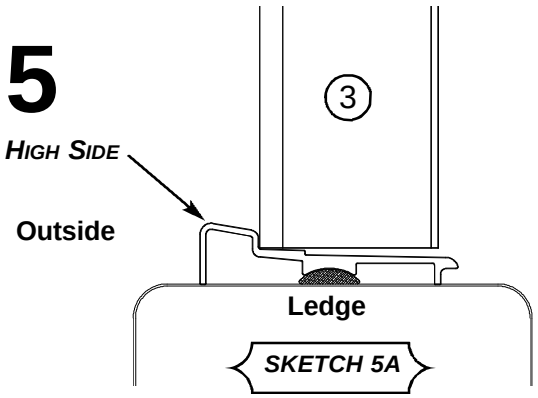

SKETCH 5A

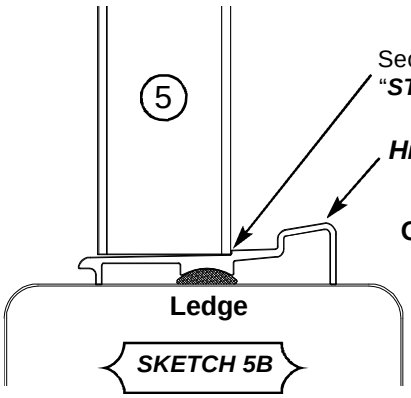

SKETCH 5B

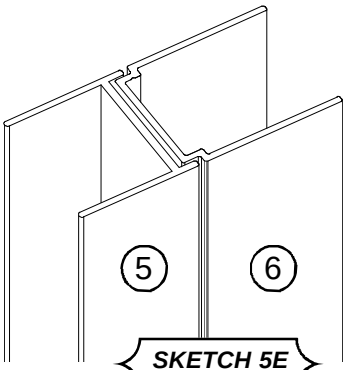

SKETCH 5E

Position the Pivot Wall Channel behind the ***HIGH SIDE*** of the Bottom Track, as shown in ***SKETCH 5A.***
Using a level to make sure it's plumb, mark the hole locations with a pencil, as shown in ***SKETCH 5C.***
Remove Pivot Wall Channel.
Please note, the Magnetic Jamb & Adjustable Wall Channel may be partially assembled. If so, remove felt pad and screw and separate for installation.

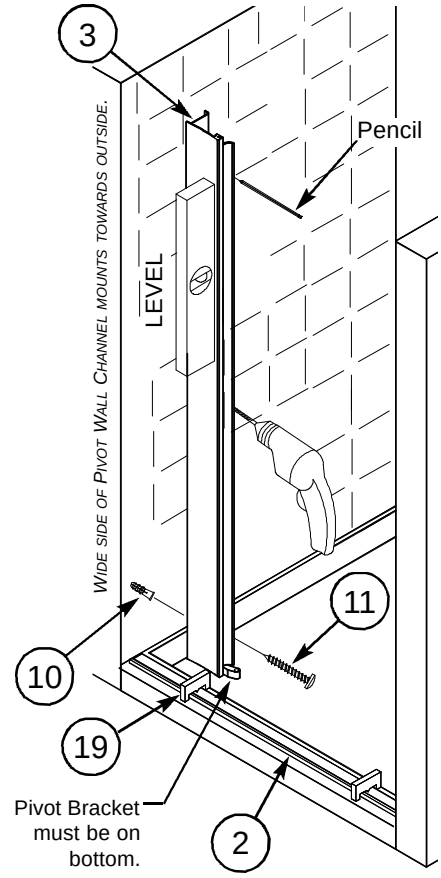

SKETCH 5C

Drill mounting holes at marked locations.
When mounting to ceramic tile, use a 1/4" masonry drill bit. Nick the ceramic tile surface at the mounting hole locations with a center punch.
After drilling, insert Wall Anchors.

When mounting to a fiberglass enclosure, use a 1/8" drill bit. Wall Anchors are not required.

Secure Pivot Wall Channel to wall with #10 x 1 1/4" long Flat Head Screws.
Secure Adjustable Wall Channel to wall with #10 x 1 1/4" long Screws.
Please note, if according to the SPECIFICATION TABULATION, a Wall Filler is necessary, position the Wall Filler against the wall behind the Adjustable Wall Channel, as shown in ***SKETCH 5E.***
Secure both to wall with #10 x 2 1/4" long Screws.

Wall Filler Requirements:
Only use Wall Filler (6) if **DIMENSION D** measurement falls within 1" of maximum opening as listed in the **SPECIFICATION TABULATION**.

Example: On Pivot Door 27", if **DIMENSION D** was between 29-1/2" and 30-1/2" then the Wall Filler is required.
When using the Wall Filler, #10 x 2-1/4" long Screws ***MUST*** be used instead of the #10 x 1-1/4" long Screws.

Insert the Magnetic Jamb into the Adjustable Wall Channel, as shown in ***SKETCH 5F.***

Secure with #8 x 3/8" long Screws. Do not tighten at this time. This will be completed at final adjustment.

Position the Adjustable Wall Channel on the Bottom Track at the second "***STEP***", as shown in ***SKETCH 5B***.

Using a level to make sure it's plumb, mark hole locations with a pencil, as shown in ***SKETCH 5D.***
Remove Adjustable Wall Channel.

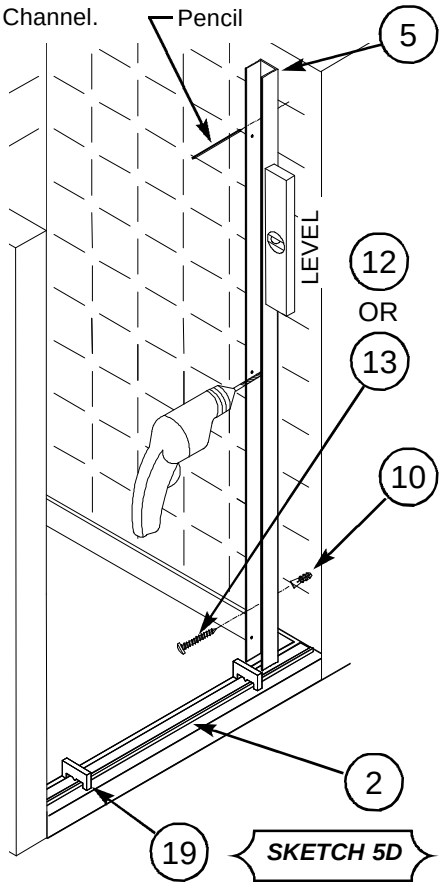

SKETCH 5D

Inside Enclosure

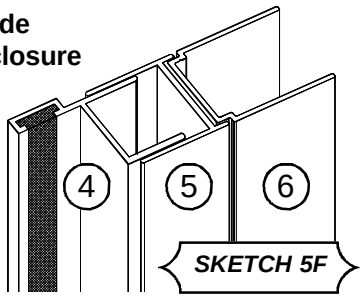

SKETCH 5F

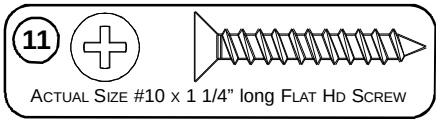

ACTUAL SIZE #10 x 1 1/4" long FLAT HD SCREW

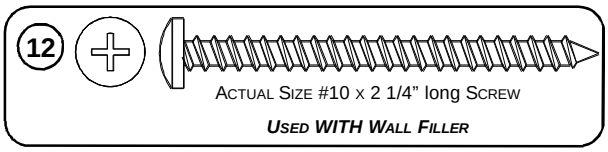

ACTUAL SIZE #10 x 2 1/4" long SCREW
USED WITH WALL FILLER

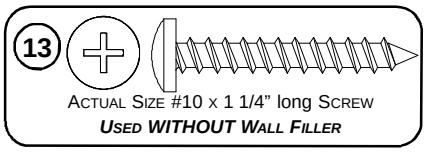

ACTUAL SIZE #10 x 1 1/4" long SCREW
USED WITHOUT WALL FILLER

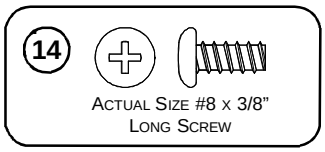

ACTUAL SIZE #8 x 3/8" LONG SCREW

6

Begin at the *bottom* Pivot Bracket location.
Insert a Nylon Bushing into bottom Pivot Bracket, as shown in ***SKETCH 6A*.**

The following step may require the help of a second person to help support the weight of the door.
Insert the Pivot Pin on the bottom Glass clamp into Nylon Bushing, as shown.

Please note, after the the Pivot Pin is inserted, the door may be rotated to the closed position so that the bottom of the door rests on the *Track and Door Install Blocks.*

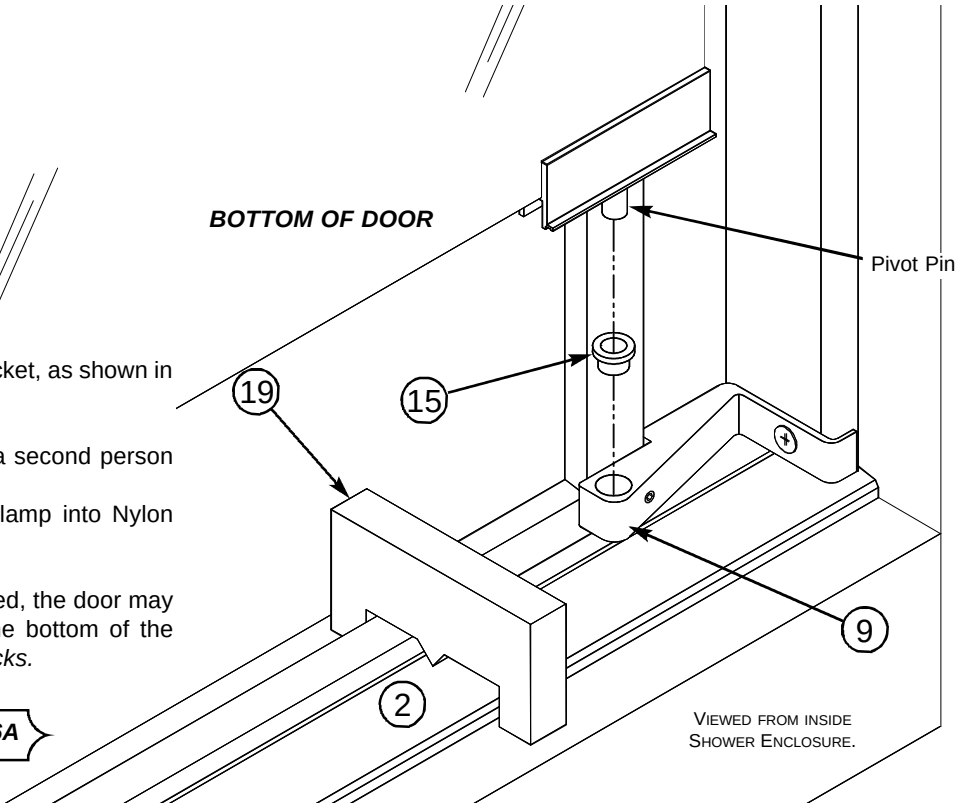

SKETCH 6A

To Secure the ***TOP of DOOR,*** slide Nylon Bushing onto the Pivot Pin, as shown in ***SKETCH 6B*.**

Guide the Pivot Bracket down so that it mates with the Pivot Wall Channel and at the same time captures the Nylon Bushing on the Pivot Pin.

Secure the Pivot Bracket to the Pivot Wall Channel with a #8 x 3/8" Screw using a #2 Phillips Head screwdriver.

Then insert the #8 x 3/16" Set Screw and tighten with the 5/64" Allen Wrench provided.

Remove *Track and Door Install Blocks.*

Please note, *DO NOT* use a power screwdriver.
Use a #2 Phillips Head screwdriver and
the 5/64" Allen Wrench provided.
WARNING: DO NOT OVER TIGHTEN.

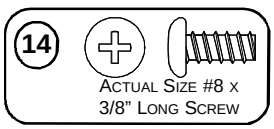

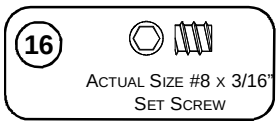

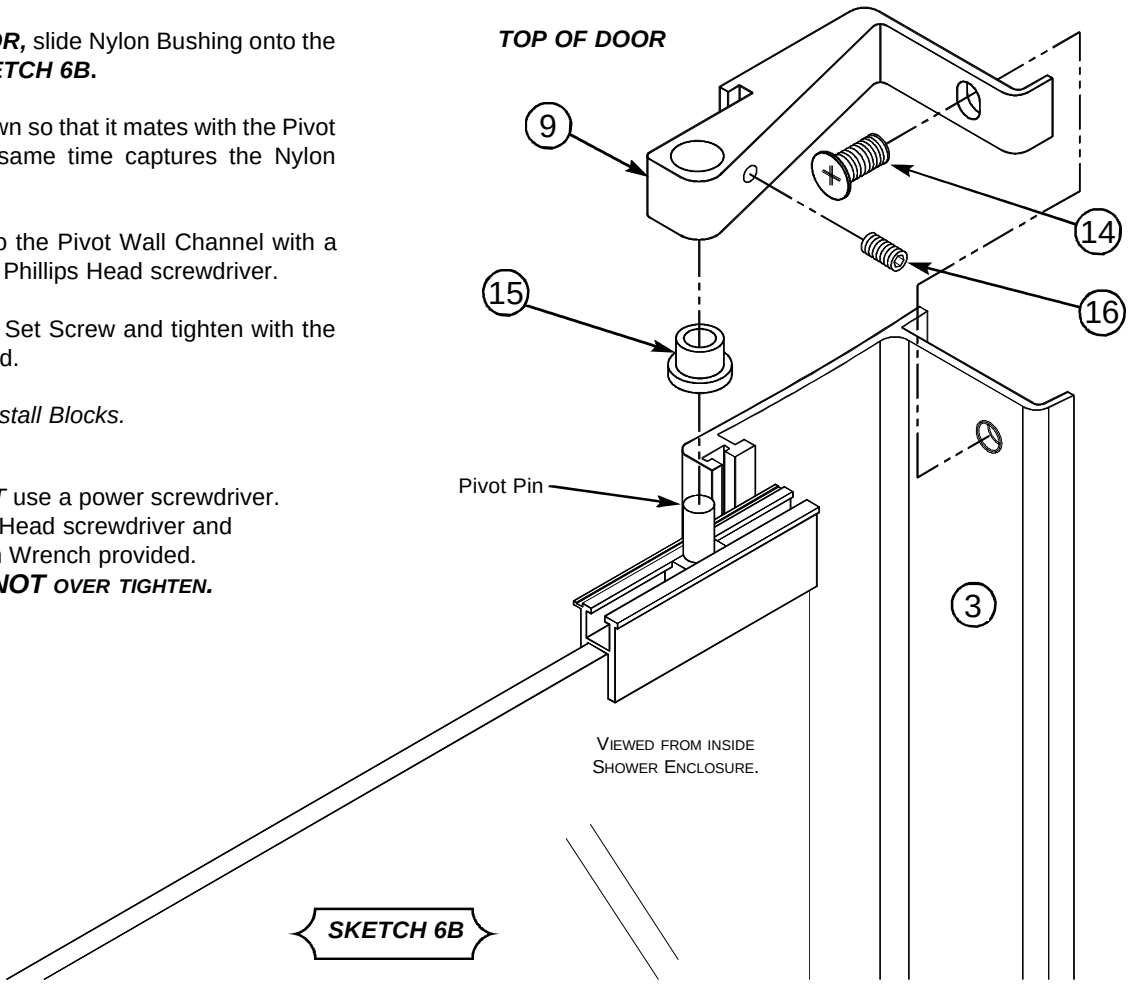

SKETCH 6B

DOOR ADJUSTMENT

7 Door adjustments are made with the Adjusting Screw on the Glass Clamps, as shown in ***SKETCH 7A***.
Use a Phillips Head Screwdriver to adjust.

Turn **clockwise** to move door out.
Turn **counter-clockwise** to bring door in.

For proper operation, there should be a 3/16" gap between the Door and Magnetic Jamb, as shown in ***SKETCH 7B.***

Additional adjustments are made with the slots in the Magnetic Jamb, as shown in ***SKETCH 7C.***
Once it's properly adjusted, tighten ***ALL*** Screws.

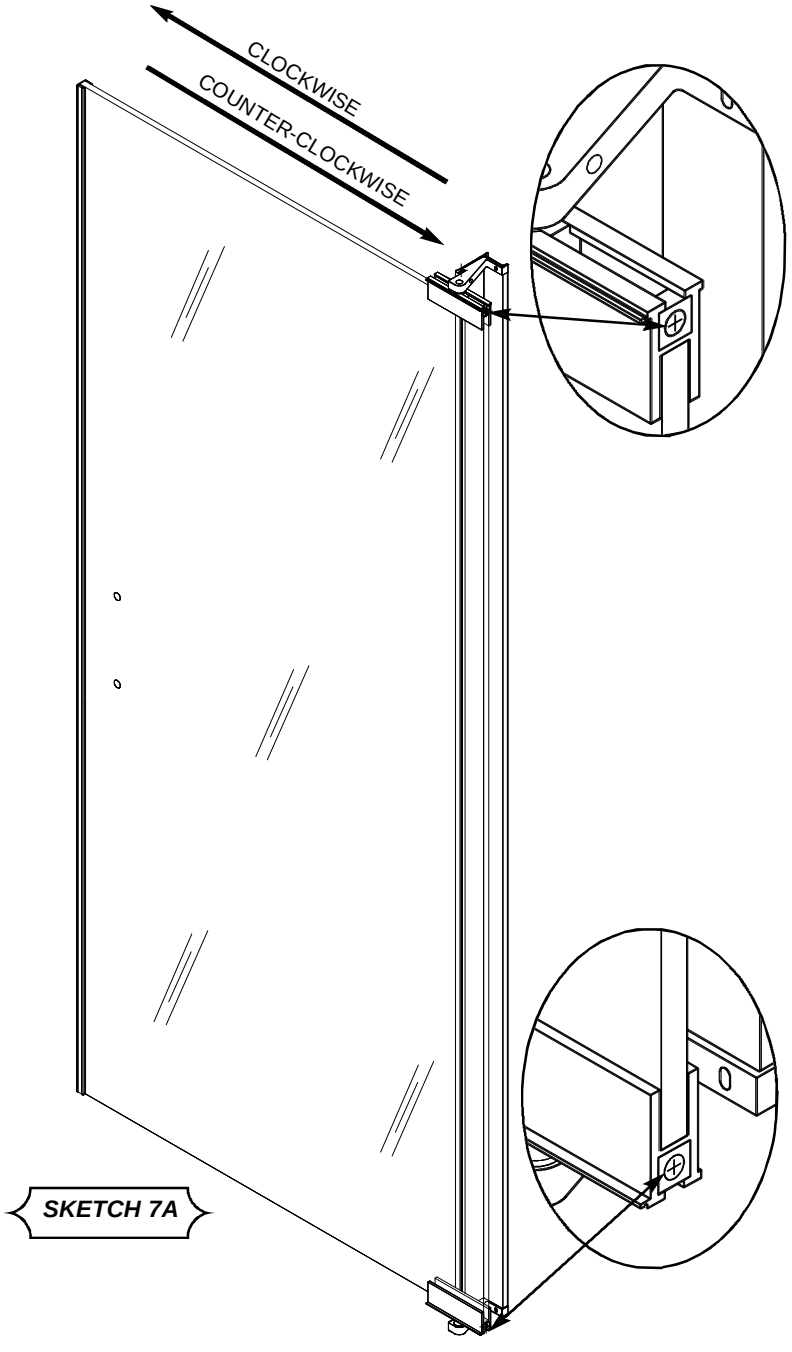

SKETCH 7A

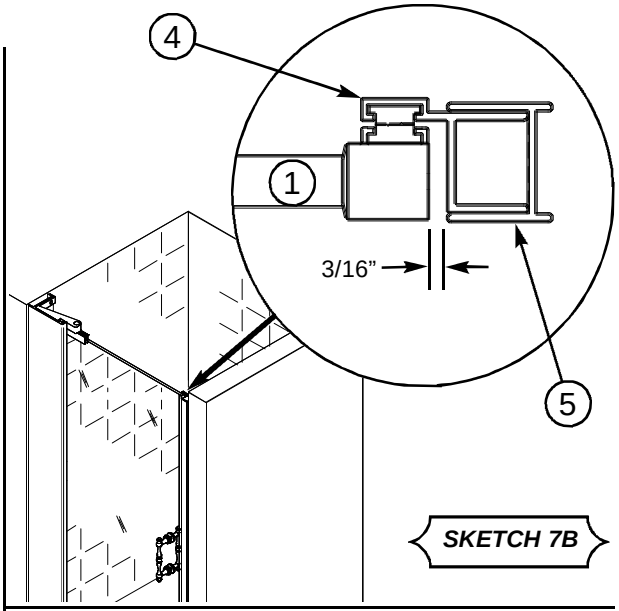

SKETCH 7B

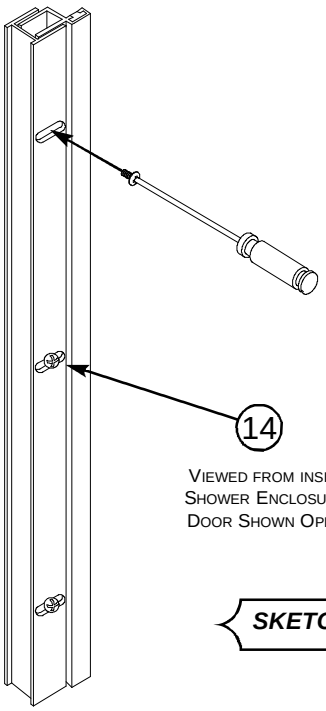

VIEWED FROM INSIDE SHOWER ENCLOSURE, DOOR SHOWN OPEN.

SKETCH 7C

Please note, *DO NOT* use a power screwdriver.
Use a #2 phillips head screw driver.
WARNING: DO NOT OVER TIGHTEN.

8 Install Handle per Installation Instructions included in Handle packag.

9

Attach the Seal Strip to the bottom of the door, as shown in ***SKETCH 9A***.

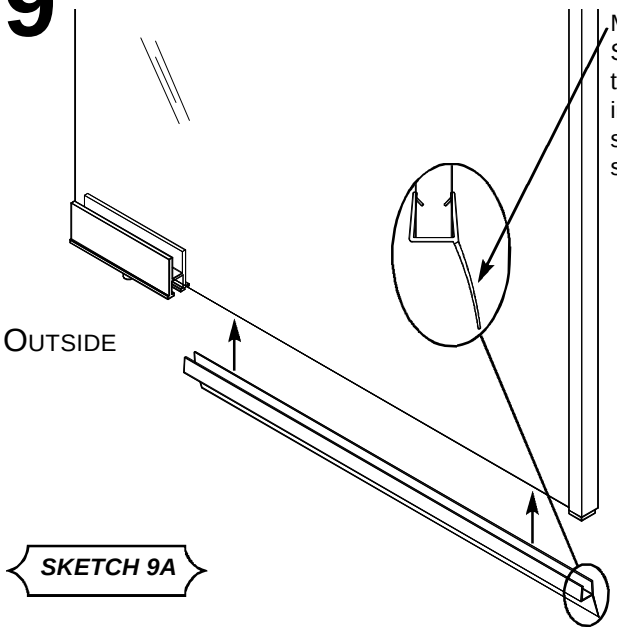

SKETCH 9A

Then attach the Glass Clamp Sweep as shown ***SKETCH 9B***.

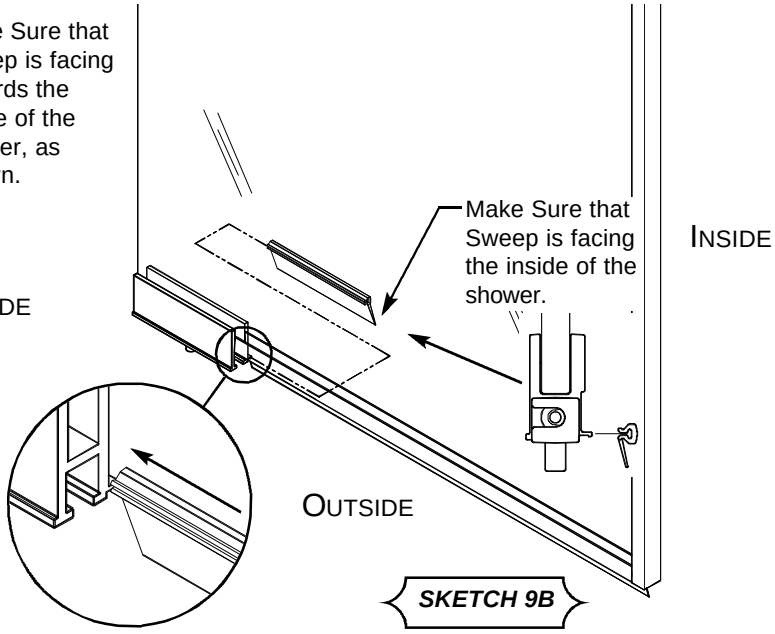

SKETCH 9B

10

Install the Top Caps as shown below.

If you have not used the Wall Filler, install parts A & B, as shown in ***SKETCH 10A.***
If you have used the Wall Filler, install parts A & C, as shown in ***SKETCH 10B.***

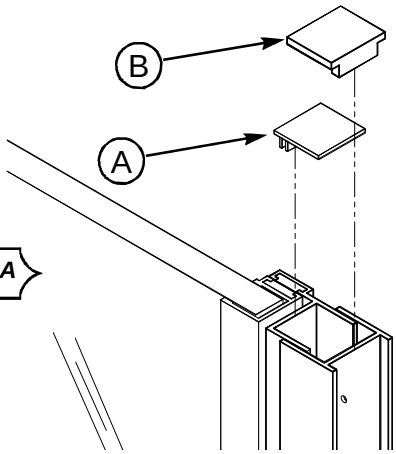

SKETCH 10A

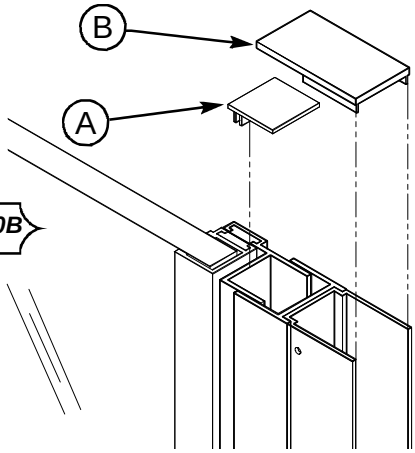

SKETCH 10B

11

Apply Silicone Sealant along seams where Wall Jambs meet walls and Bottom Track meets shower sill, as shown in ***SKETCH 11A***.

If Wall Filler is used, apply Silicone Sealant on seam between Wall Filler and Adjustable Wall Channel.

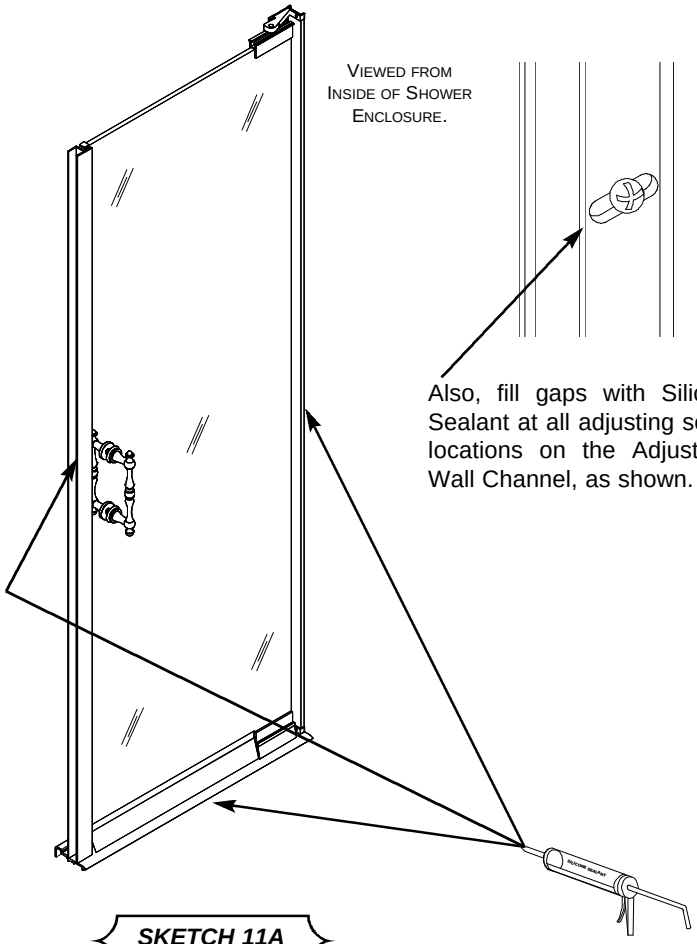

VIEWED FROM INSIDE OF SHOWER ENCLOSURE.

Also, fill gaps with Silicone Sealant at all adjusting screw locations on the Adjustable Wall Channel, as shown.

SKETCH 11A

ILLUSTRATION OF PARTS



(2) Bottom Track

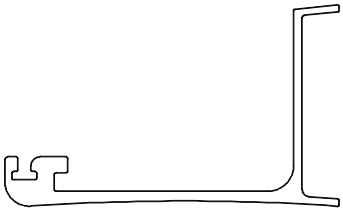

(3) Pivot Wall Channel

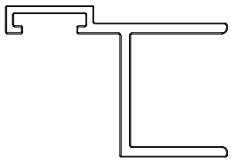

(4) Magnetic Jamb

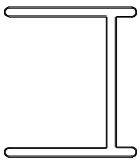

(5) Adjustable Wall Channel

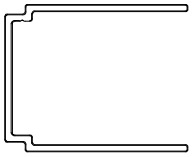

(6) Wall Filler



(7) Drip Sheild



(8) Seal Strip

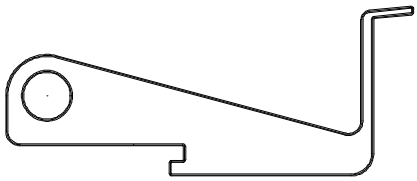

(9) Pivot Bracket

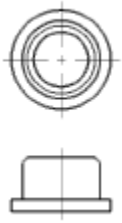

(15) Nylon Bushing



(18) Glass Clamp Sweep

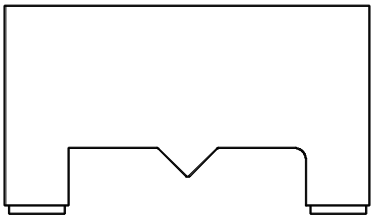

(19) Door and Track Install Block

(19) Adjustable Top Cap - 3 Piece Set

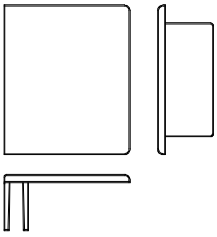

(A) For use with Magnetic Jamb

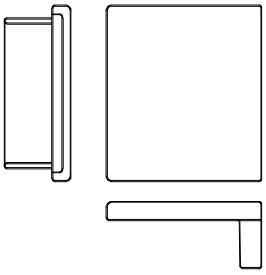

(B) For use with Adjustable Wall Channel

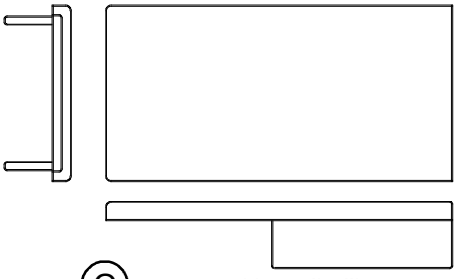

(C) For use with Wall Filler

ASSEMBLY HARDWARE

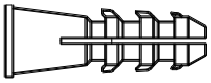

(10) Wall Anchor



(11) #10 x 1 1/4" lg. Flat Head Screw

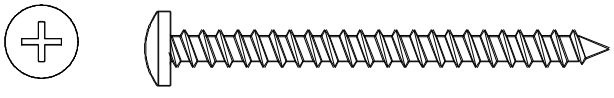

Use this with Wall Filler

(12) #10 x 2 1/4" lg. Pan Head Screw



Use this without Wall Filler

(13) #10 x 1 1/4" lg. Pan Head Screw

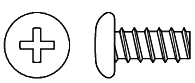

(14) #8 x 3/8" lg. Screw



(16) #8 x 3/16" lg. Set Screw



(17) 5/64 Allen Wrench