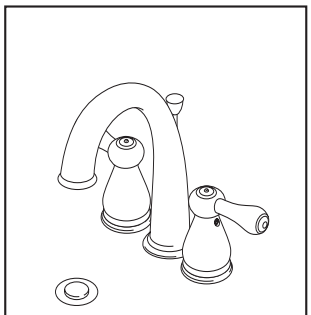

4575▲
4575▲-MPU

Submitted Model No.:_____

Specific Features:_____

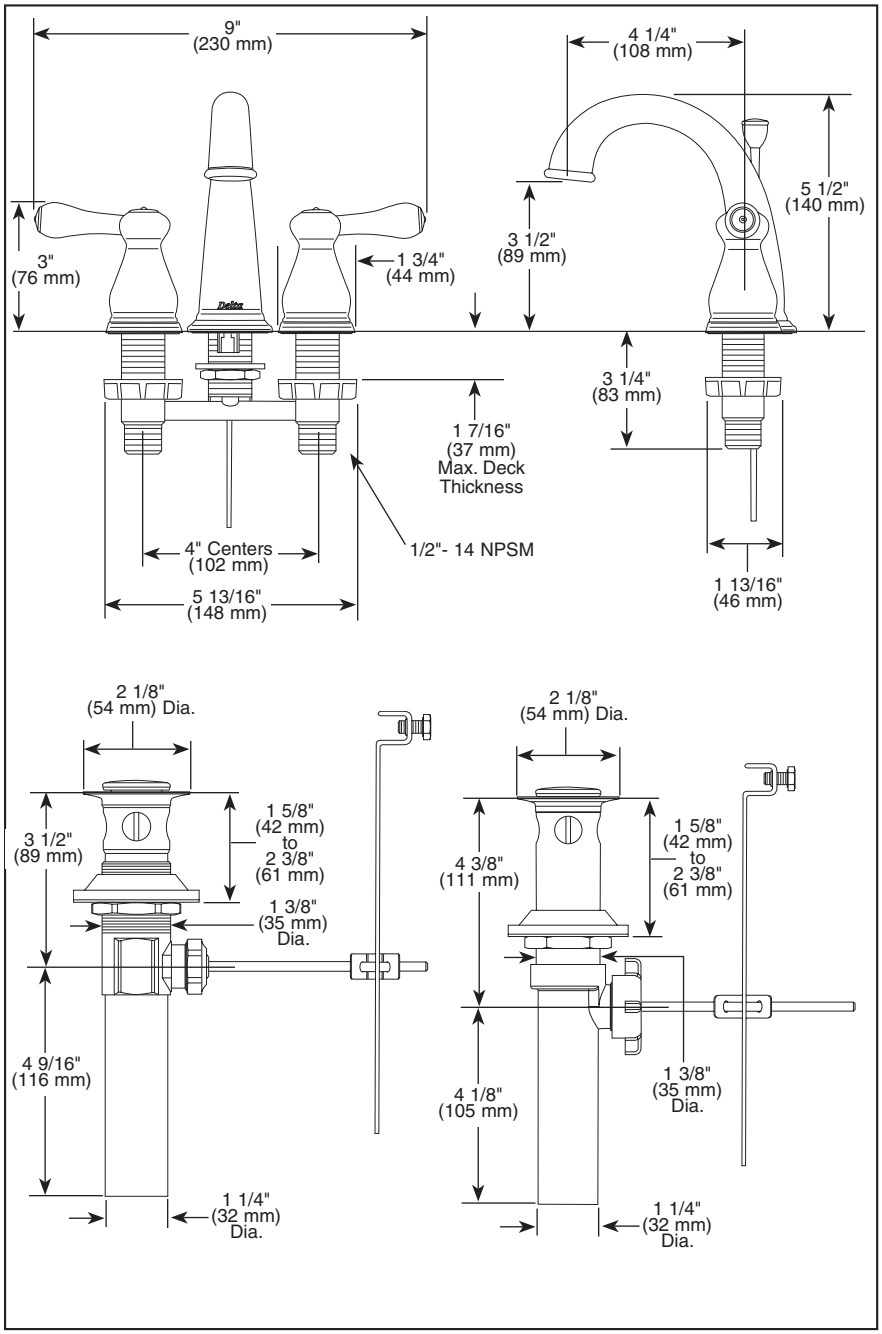

▲ = Designate Proper Finish Suffix

Delta reserves the right (1) to make changes in specifications and materials, and (2) to change or discontinue models, both without notice or obligation. Dimensions are for reference only. See current full-line price book or www.specselect.com for finish options and product availability.

DSP-L-4575 Rev. C

LAVATORY FAUCETS

- Leland® Bath Collection
- Two Handle Deck Mount
- 3 Hole Sink Applications
- 4" Mini-Widespread

STANDARD SPECIFICATIONS:

- Solid brass fabricated body.
- 4" (102 mm) mini-widespread.
- 4 1/4" (108 mm) long, 5 1/2" (140 mm) high rigid spout.
- 1/4 turn stops.
- Control mechanism shall be of the rotating cylinder type with stainless steel plate and 90° rotation, with replaceable non-metallic seats operating in stainless steel lined sockets.
- 1/2"-14 NPSM threaded male inlet shanks.
- Models without "MPU" suffix include polypropylene pop-up type drain fitting with plated metal flange and stopper cap.
- Models with "MPU" suffix include metal drain with pop-up type fitting with plated flange and stopper cap.
- Models have a maximum 1.5 gpm flowrate @ 60 PSI.

WARRANTY

- Lifetime Faucet and Finish Limited Warranty to the original consumer purchaser to be free from defects in material and workmanship.
- 5 Year Limited Warranty for usage in all industrial, commercial and business applications.

COMPLIES WITH:

- ASME A112.18.1 / CSA B125.1
- ASME A112.18.2 / CSA B125.2
- Indicates compliance to ICC/ANSI A117.1
- EPA Water Sense

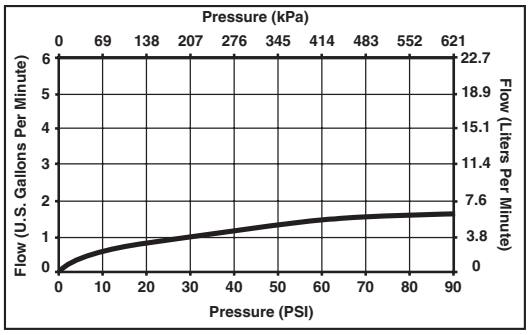

DELTA FAUCET COMPANY

55 E. 111th Street, Indianapolis, Indiana 46280
395 Matheson Blvd. E., Mississauga, ON L4Z 2H2

© 2009 Masco Corporation of Indiana