Metris™ Trim, 4-Hole Roman Tub Set
31446XX1

Available in Chrome (00), Brushed Nickel (82)

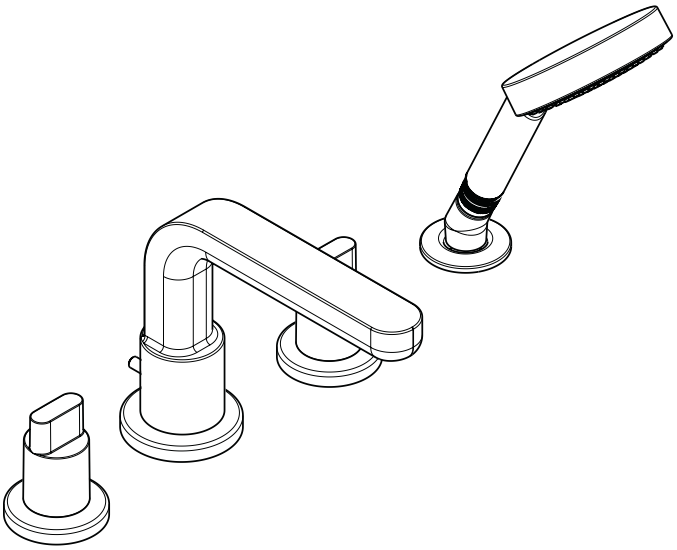

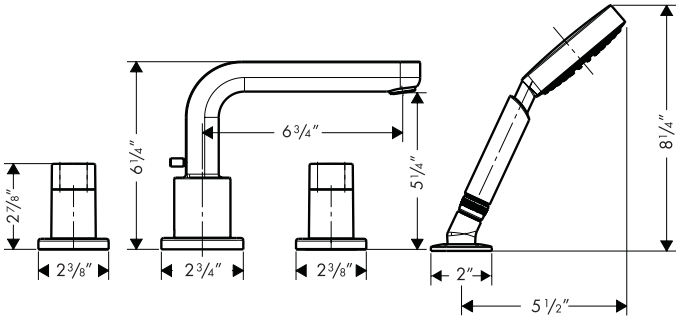

Product Specification

Includes handshower
- refreshing full spray
- Air injection technology
- Rubit™ cleaning system
- Flow rate 2.5 gpm

Protection against back siphonage provided by check valve
Requires rough valve 06646000 (not included)

hansgrohe