KB1001*,KB1002,4,5,8,9
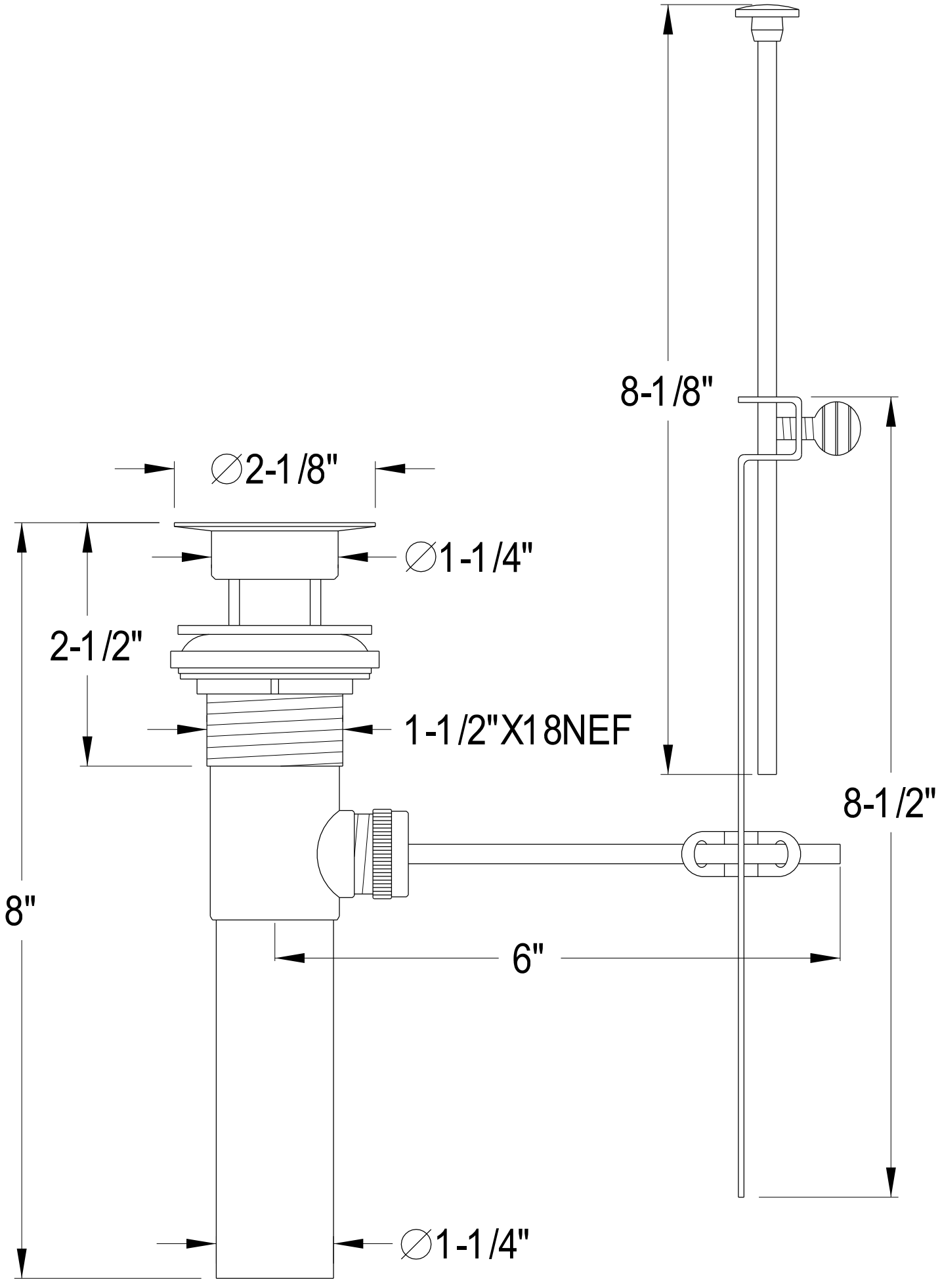
Brass pop-up