ROHL

Authentic Luxury for Kitchen and Bath®

www.rohlhome.com

## SAN JULIO 3-HOLE DECK MOUNT BATH MIXER WITH C-SPOUT

ROHL Country Bath Collection

# **A2154LM** (Metal Levers)
# **A2154LP** (Porcelain Levers)
# **A2154XM** (Cross Handles)

### FEATURES

- Fixed spout
- 1/4-turn ceramic valves
- 3 x 1 5/16" cutouts
- 8 25/32" spout reach
- 6 3/16" spout height
- 15-17 GPM at 45 PSI
- 3/4" NPT connectors
- Solid brass
- Matching lav set A2108LM/LP/XM

### COLORS/FINISHES

- Polished Chrome
- Polished Nickel
- Satin Nickel
- Tuscan Brass
- Inca Brass

### WARRANTY

- Limited Lifetime*

*No warranty on Tuscan Brass Finish (TCB)

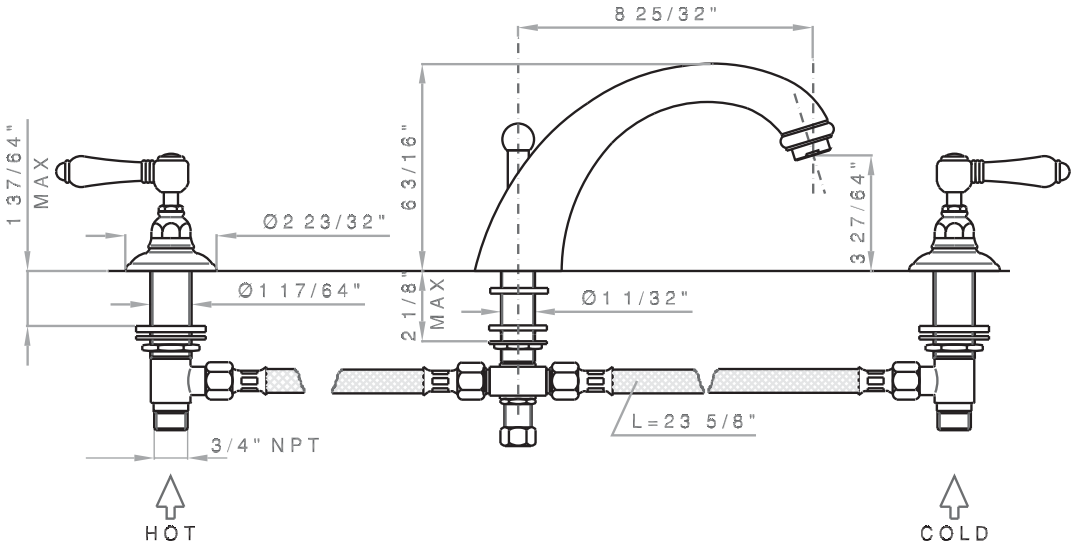


Consult your local ROHL showroom for additional information and specifications. For complete warranty details and a list of showrooms, go to www.rohlhome.com.