hansgrohe

Talis S
4-Hole Roman Tub Set Trim with 1.8 GPM Handshower
Finishes : **chrome** Part no. : **72414001**

Description

Features

- Flow: 5.31 GPM (20.1 L/Min)
- 90° ceramic valves
- Integrated double backflow prevention

Item details

List Price	$ 589.00

Technology

Quick Clean

Compliance

MAP

WaterSense Meets EPA Criteria

WaterSense Meets EPA Criteria

UPC

Product image
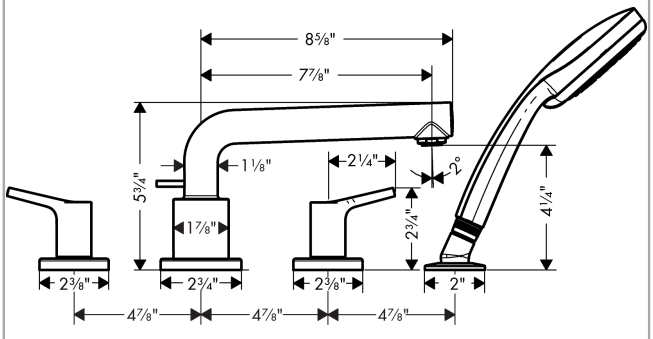
Scale drawing